Nidec
All for dreams

Control User Guide

Commander C200/ C300

Variable Speed AC drive for induction motors

Part Number: 0478-0535-02
Issue: 2

Original Instructions

For the purposes of compliance with the EU Machinery Directive 2006/42/EC, the English version of this manual is the Original Instructions. Manuals in other languages are Translations of the Original Instructions.

Documentation

Manuals are available to download from the following locations: **http://www.drive-setup.com/ctdownloads**

The information contained in this manual is believed to be correct at the time of printing and does not form part of any contract. The manufacturer reserves the right to change the specification of the product and its performance, and the contents of the manual, without notice.

Warranty and Liability

In no event and under no circumstances shall the manufacturer be liable for damages and failures due to misuse, abuse, improper installation, or abnormal conditions of temperature, dust, or corrosion, or failures due to operation outside the published ratings. The manufacturer is not liable for consequential and incidental damages. Contact the supplier of the drive for full details of the warranty terms.

Environmental policy

Control Techniques Ltd operates an Environmental Management System (EMS) that conforms to the International Standard ISO 14001.

Further information on our Environmental Policy can be found at: **http://www.drive-setup.com/environment**

Restriction of Hazardous Substances (RoHS)

The products covered by this manual comply with European and International regulations on the Restriction of Hazardous Substances including EU directive 2011/65/EU and the Chinese Administrative Measures for Restriction of Hazardous Substances in Electrical and Electronic Products.

Disposal and Recycling (WEEE)

When electronic products reach the end of their useful life, they must not be disposed of along with domestic waste but should be recycled by a specialist recycler of electronic equipment. Control Techniques products are designed to be easily dismantled into their major component parts for efficient recycling. The majority of materials used in the product are suitable for recycling.

Product packaging is of good quality and can be re-used. Large products are packed in wooden crates. Smaller products are packaged in strong cardboard cartons which have a high recycled fibre content. Cartons can be re-used and recycled. Polythene, used in protective film and bags for wrapping the product, can be recycled. When preparing to recycle or dispose of any product or packaging, please observe local legislation and best practice.

REACH legislation

EC Regulation 1907/2006 on the Registration, Evaluation, Authorisation and restriction of Chemicals (REACH) requires the supplier of an article to inform the recipient if it contains more than a specified proportion of any substance which is considered by the European Chemicals Agency (ECHA) to be a Substance of Very High Concern (SVHC) and is therefore listed by them as a candidate for compulsory authorisation.

Further information on our compliance with REACH can be found at: **http://www.drive-setup.com/reach**

Registered Office

Nidec Control Techniques Ltd
The Gro
Newtown
Powys
SY16 3BE
UK

Registered in England and Wales. Company Reg. No. 01236886.

Copyright

The contents of this publication are believed to be correct at the time of printing. In the interests of a commitment to a policy of continuous development and improvement, the manufacturer reserves the right to change the specification of the product or its performance, or the contents of the guide, without notice.

All rights reserved. No parts of this guide may be reproduced or transmitted in any form or by any means, electrical or mechanical including photocopying, recording or by an information storage or retrieval system, without permission in writing from the publisher.

Copyright © October 2019 Nidec Control Techniques Ltd

How to use this guide

This guide is intended to be used in conjunction with the appropriate Power Installation Guide. The Power Installation Guide gives information necessary to physically install the drive. This guide gives information on drive configuration, operation and optimization.

NOTE

There are specific safety warnings throughout this guide, located in the relevant sections. In addition, Chapter 1 *Safety information* on page 8 contains general safety information. It is essential that the warnings are observed and the information considered when working with or designing a system using the drive.

This map of the user guide helps to find the right sections for the task you wish to complete, but for specific information, refer to *Contents* on page 4:

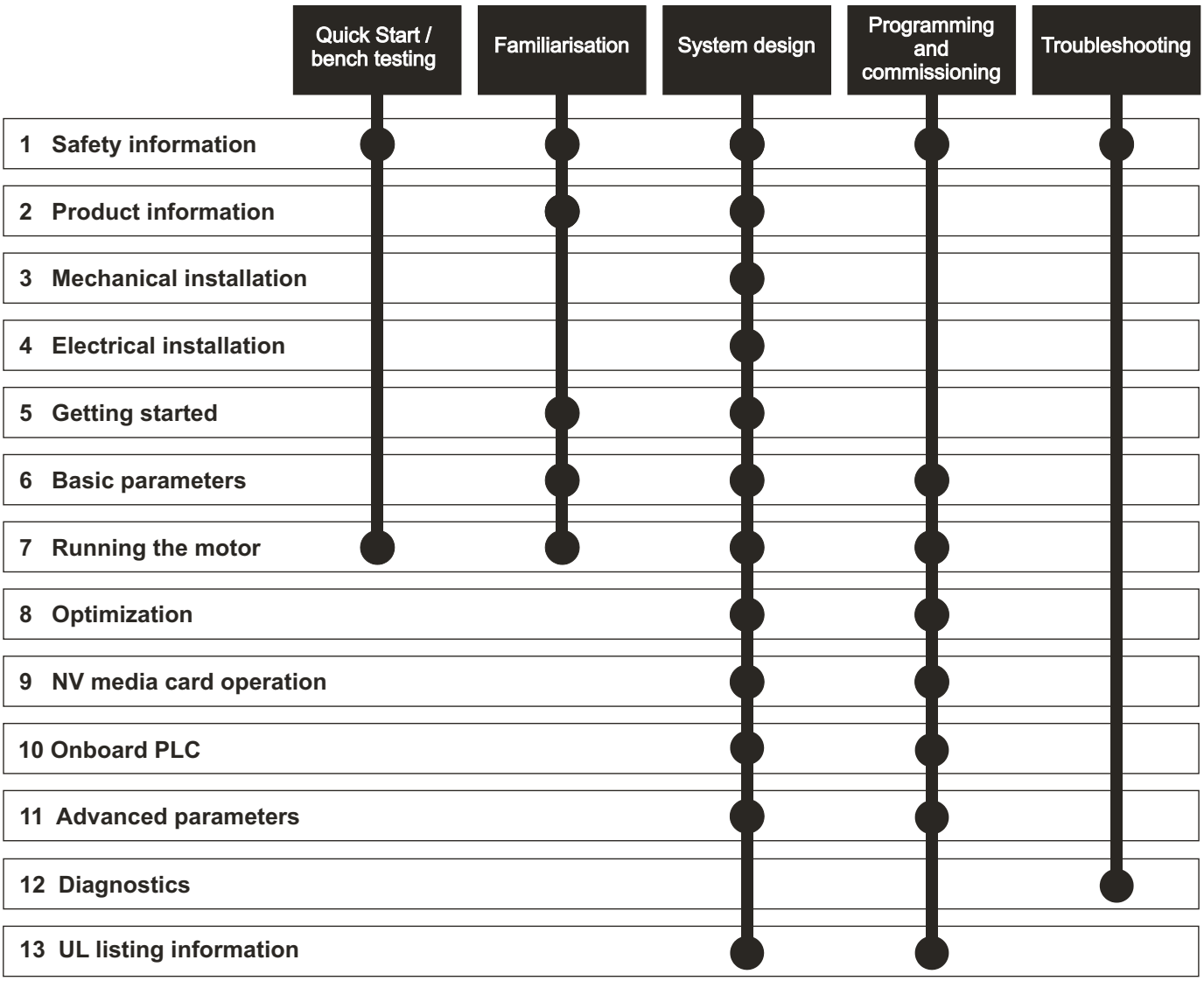

Contents

1 Safety information 8
1.1 Warnings, Cautions and Notes 8
1.2 Important safety information. Hazards. Competence of designers and installers 8
1.3 Responsibility 8
1.4 Compliance with regulations 8
1.5 Electrical hazards 8
1.6 Stored electrical charge 8
1.7 Mechanical hazards 8
1.8 Access to equipment 8
1.9 Environmental limits 8
1.10 Hazardous environments 8
1.11 Motor 9
1.12 Mechanical brake control 9
1.13 Adjusting parameters 9
1.14 Electromagnetic compatibility (EMC) 9

2 Product information 10
2.1 Introduction 10
2.2 Model number 10
2.3 Ratings 11
2.4 Operating modes 12
2.5 Keypad and display 12
2.6 Nameplate description 13
2.7 Options 13

3 Mechanical installation 15
3.1 Installing / removing options 15
3.2 Real time clock battery replacement 18

4 Electrical installation 19
4.1 24 Vdc supply 19
4.2 Communication connections 19
4.3 Control connections 20
4.4 Safe Torque Off (STO) (C300 only) 23

5 Getting started 25
5.1 Understanding the display 25
5.2 Keypad operation 25
5.3 Menu structure 27
5.4 Menu 0 27
5.5 Advanced menus 27
5.6 Changing the operating mode 28
5.7 Saving parameters 28
5.8 Restoring parameter defaults 28
5.9 Parameter access level and security 29
5.10 Displaying parameters with non-default values only 29
5.11 Displaying destination parameters only 29
5.12 Communications 30

6 Basic parameters 31
6.1 Parameter ranges and Variable minimum/ maximums: 31
6.2 Menu 0: Basic parameters 31
6.3 Parameter descriptions 36

7 Running the motor 56
7.1 Quick start connections 56
7.2 Changing the operating mode 56
7.3 Quick start commissioning / start-up 61

8 Optimization 63
8.1 Motor map parameters 63
8.2 Maximum motor rated current 70
8.3 Current limits 70
8.4 Motor thermal protection 70
8.5 Switching frequency 71
8.6 CT Modbus RTU specification 72

9 NV Media Card 77
9.1 Introduction 77
9.2 SD card support 77
9.3 NV Media Card parameters 80
9.4 NV Media Card trips 80
9.5 Data block header information 80

10 Onboard PLC 81
10.1 Onboard PLC and Machine Control Studio 81
10.2 Benefits 81
10.3 Features 81
10.4 Onboard PLC parameters 82
10.5 Onboard PLC trips 82

11 Advanced parameters 83
11.1 Parameter ranges and Variable minimum/ maximums: 87
11.2 Menu 1: Frequency reference 94
11.3 Menu 2: Ramps 98
11.4 Menu 3: Frequency control 101
11.5 Menu 4: Torque and current control 106
11.6 Menu 5: Motor control 109
11.7 Menu 6: Sequencer and clock 114
11.8 Menu 7: Analog I/O 117
11.9 Menu 8: Digital I/O 120
11.10 Menu 9: Programmable logic, motorized pot, binary sum and timers 125
11.11 Menu 10: Status and trips 129
11.12 Menu 11: General drive set-up 131
11.13 Menu 12: Threshold detectors, variable selectors and brake control function 133
11.14 Menu 14: User PID controller 138
11.15 Menu 15: Option module set-up 141
11.16 Menu 18: Application menu 1 142
11.17 Menu 20: Application menu 2 143
11.18 Menu 21: Second motor parameters 144
11.19 Menu 22: Additional Menu 0 set-up 145
11.20 Menu 24: Option Module Application 146

12 Diagnostics 147
12.1 Status modes (Keypad and LED status) 147
12.2 Trip indications 147
12.3 Identifying a trip / trip source 148
12.4 Trips, Sub-trip numbers 149
12.5 Internal / Hardware trips 168
12.6 Alarm indications 168
12.7 Status indications 169
12.8 Displaying the trip history 169
12.9 Behaviour of the drive when tripped 170

13 UL Listing 171
13.1 UL file reference 171
13.2 Option modules, kits and accessories 171
13.3 Enclosure ratings 171
13.4 Mounting 171
13.5 Environment 171
13.6 Electrical Installation 171
13.7 Motor overload protection and thermal memory retention 171
13.8 External Class 2 supply 171
13.9 Modular Drive Systems 171
13.10 Requirement for Transient Surge Suppression .172

EU Declaration of Conformity

Nidec Control Techniques Ltd,
The Gro,
Newtown,
Powys,
UK.
SY16 3BE.

This declaration is issued under the sole responsibility of the manufacturer. The object of the declaration is in conformity with the relevant European Union harmonisation legislation. The declaration applies to the variable speed drive products shown below:

Model number	Interpretation	Nomenclature aaaa - bbc ddddde
aaaa	Basic series	C200, C300
bb	Frame size	01, 02, 03, 04, 05, 06, 07, 08, 09
c	Voltage rating	1 = 100 V, 2 = 200 V, 4 = 400 V, 5 = 575 V
ddddd	Current rating	Example 01000 = 100 A
e	Drive format	A = 6P Rectifier + Inverter with internal choke, E = 6P Rectifier + Inverter (external choke)

The model number may be followed by other characters that do not affect the ratings.

The variable speed drive products listed above have been designed and manufactured in accordance with the following European harmonised standards:

EN 61800-5-1:2007	Adjustable speed electrical power drive systems - Part 5-1: Safety requirements - Electrical, thermal and energy
EN 61800-3: 2004+A1:2012	Adjustable speed electrical power drive systems - Part 3: EMC requirements and specific test methods
EN 61000-6-2:2005	Electromagnetic compatibility (EMC) - Part 6-2: Generic standards - Immunity for industrial environments
EN 61000-6-4: 2007+ A1:2011	Electromagnetic compatibility (EMC) - Part 6-4: Generic standards - Emission standard for industrial environments
EN 61000-3-2:2014	Electromagnetic compatibility (EMC) - Part 3-2: Limits for harmonic current emissions (equipment input current ≤ 16 A per phase)
EN 61000-3-3:2013	Electromagnetic compatibility (EMC) - Part 3-3: Limitation of voltage changes, voltage fluctuations and flicker in public, low voltage supply systems, for equipment with rated current ≤ 16 A per phase and not subject to conditional connection

EN 61000-3-2: 2014 Applicable where input current < 16 A. No limits apply for professional equipment where input power ≥ 1 kW.

These products comply with the Restriction of Hazardous Substances Directive (2011/65/EU), the Low Voltage Directive (2014/35/EU) and the Electromagnetic Compatibility Directive (2014/30/EU).

Jonathan Holman-White

Director of Research and Development

Date: 9th October 2018.

These electronic drive products are intended to be used with appropriate motors, controllers, electrical protection components and other equipment to form complete end products or systems. Compliance with safety and EMC regulations depends upon installing and configuring drives correctly, including using the specified input filters.

The drives must be installed only by professional installers who are familiar with requirements for safety and EMC. Refer to the Product Documentation. An EMC data sheet is available giving detailed information. The assembler is responsible for ensuring that the end product or system complies with all the relevant laws in the country where it is to be used.

EU Declaration of Conformity (Machinery Directive)

Nidec Control Techniques Ltd
The Gro
Newtown
Powys
SY16 3BE
UK

This declaration is issued under the sole responsibility of the manufacturer. The object of the declaration is in conformity with the relevant European Union harmonisation legislation. The declaration applies to the variable speed drive products shown below:

Model No.	Interpretation	Nomenclature aaaa - bbc ddddde
aaaa	Basic series	C300
bb	Frame size	01, 02, 03, 04, 05, 06, 07, 08, 09
c	Voltage rating	1 = 100 V, 2 = 200 V, 4 = 400 V, 5 = 575 V
ddddd	Current rating	Example 01000 = 100 A
e	Drive format	A = 6P Rectifier + Inverter with internal choke, E = 6P Rectifier + Inverter (external choke)

The model number may be followed by additional characters that do not affect the ratings.

This declaration relates to these products when used as a safety component of a machine. Only the Safe Torque Off function may be used for a safety function of a machine. None of the other functions of the drive may be used to carry out a safety function.

These products fulfil all the relevant provisions of the Machinery Directive (2006/42/EC) and the Electromagnetic Compatibility Directive (2014/30/EU).

EC type examination has been carried out by the following notified body:

TUV Rheinland Industrie Service GmbH
Am Grauen Stein
D-51105 Köln
Germany

EC type-examination certificate numbers:

Frame sizes 1 to 4: 01/205/5383.03/18 dated 2018-08-16
Frame sizes 5 to 9: 01/205/5387.02/18 dated 2018-08-16

Notified body identification number: 0035

The harmonized standards used are shown below:

EN 61800-5-2:2007	Adjustable speed electrical power drive systems - Part 5-2: Safety requirements - Functional
EN 61800-5-1:2007 (in extracts)	Adjustable speed electrical power drive systems - Part 5-1: Safety requirements - Electrical, thermal and energy
EN 61800-3: 2004+A1:2012	Adjustable speed electrical power drive systems - Part 3: EMC requirements and specific test methods
EN ISO 13849-1:2008 + AC:2009	Safety of Machinery, Safety-related parts of control systems, General principles for design
EN 62061:2005 + AC:2010 + A1:2013	Safety of machinery, Functional safety of safety related electrical, electronic and programmable electronic control systems
IEC 61508 Parts 1 - 7:2010	Functional safety of electrical/ electronic/programmable electronic safety-related systems

Person authorised to complete the technical file: P. Knight
Conformity Engineer

DoC authorised by: **Jon Holman-White**
Director of Research and Development

Date: **9th October 2018**

Place: **Newtown, Powys, UK**

IMPORTANT NOTICE

These electronic drive products are intended to be used with appropriate motors, controllers, electrical protection components and other equipment to form complete end products or systems. It is the responsibility of the installer to ensure that the design of the complete machine, including its safety-related control system, is carried out in accordance with the requirements of the Machinery Directive and any other relevant legislation. The use of a safety-related drive in itself does not ensure the safety of the machine. Compliance with safety and EMC regulations depends upon installing and configuring drives correctly, including using the specified input filters. The drive must be installed only by professional installers who are familiar with requirements for safety and EMC. The assembler is responsible for ensuring that the end product or system complies with all relevant laws in the country where it is to be used. For more information regarding Safe Torque Off, refer to the Product Documentation.

1 Safety information

1.1 Warnings, Cautions and Notes

WARNING

A Warning contains information which is essential for avoiding a safety hazard.

CAUTION

A Caution contains information which is necessary for avoiding a risk of damage to the product or other equipment.

NOTE

A Note contains information which helps to ensure correct operation of the product.

1.2 Important safety information. Hazards. Competence of designers and installers

This guide applies to products which control electric motors either directly (drives) or indirectly (controllers, option modules and other auxiliary equipment and accessories). In all cases the hazards associated with powerful electrical drives are present, and all safety information relating to drives and associated equipment must be observed.

Specific warnings are given at the relevant places in this guide.

Drives and controllers are intended as components for professional incorporation into complete systems. If installed incorrectly they may present a safety hazard. The drive uses high voltages and currents, carries a high level of stored electrical energy, and is used to control equipment which can cause injury. Close attention is required to the electrical installation and the system design to avoid hazards either in normal operation or in the event of equipment malfunction. System design, installation, commissioning/start-up and maintenance must be carried out by personnel who have the necessary training and competence. They must read this safety information and this guide carefully.

1.3 Responsibility

It is the responsibility of the installer to ensure that the equipment is installed correctly with regard to all instructions given in this guide. They must give due consideration to the safety of the complete system, so as to avoid the risk of injury both in normal operation and in the event of a fault or of reasonably foreseeable misuse.

The manufacturer accepts no liability for any consequences resulting from inappropriate, negligent or incorrect installation of the equipment.

1.4 Compliance with regulations

The installer is responsible for complying with all relevant regulations, such as national wiring regulations, accident prevention regulations and electromagnetic compatibility (EMC) regulations. Particular attention must be given to the cross-sectional areas of conductors, the selection of fuses or other protection, and protective ground (earth) connections.

This guide contains instructions for achieving compliance with specific EMC standards.

All machinery to be supplied within the European Union in which this product is used must comply with the following directives:

2006/42/EC Safety of machinery.

2014/30/EU: Electromagnetic Compatibility.

1.5 Electrical hazards

The voltages used in the drive can cause severe electrical shock and/or burns, and could be lethal. Extreme care is necessary at all times when working with or adjacent to the drive. Hazardous voltage may be present in any of the following locations:

- AC and DC supply cables and connections
- Output cables and connections
- Many internal parts of the drive, and external option units

Unless otherwise indicated, control terminals are single insulated and must not be touched.

The supply must be disconnected by an approved electrical isolation device before gaining access to the electrical connections.

The STOP and Safe Torque Off functions of the drive do not isolate dangerous voltages from the output of the drive or from any external option unit.

The drive must be installed in accordance with the instructions given in this guide. Failure to observe the instructions could result in a fire hazard.

1.6 Stored electrical charge

The drive contains capacitors that remain charged to a potentially lethal voltage after the AC supply has been disconnected. If the drive has been energized, the AC supply must be isolated at least ten minutes before work may continue.

1.7 Mechanical hazards

Careful consideration must be given to the functions of the drive or controller which might result in a hazard, either through their intended behaviour or through incorrect operation due to a fault. In any application where a malfunction of the drive or its control system could lead to or allow damage, loss or injury, a risk analysis must be carried out, and where necessary, further measures taken to reduce the risk - for example, an over-speed protection device in case of failure of the speed control, or a fail-safe mechanical brake in case of loss of motor braking.

With the sole exception of the Safe Torque Off function, none of the drive functions must be used to ensure safety of personnel, i.e. they must not be used for safety-related functions.

The Safe Torque Off function may be used in a safety-related application. The system designer is responsible for ensuring that the complete system is safe and designed correctly according to the relevant safety standards.

The design of safety-related control systems must only be done by personnel with the required training and experience. The Safe Torque Off function will only ensure the safety of a machine if it is correctly incorporated into a complete safety system. The system must be subject to a risk assessment to confirm that the residual risk of an unsafe event is at an acceptable level for the application.

1.8 Access to equipment

Access must be restricted to authorized personnel only. Safety regulations which apply at the place of use must be complied with.

1.9 Environmental limits

Instructions in this guide regarding transport, storage, installation and use of the equipment must be complied with, including the specified environmental limits. This includes temperature, humidity, contamination, shock and vibration. Drives must not be subjected to excessive physical force.

1.10 Hazardous environments

The equipment must not be installed in a hazardous environment (i.e. a potentially explosive environment).

1.11 Motor

The safety of the motor under variable speed conditions must be ensured.

To avoid the risk of physical injury, do not exceed the maximum specified speed of the motor.

Low speeds may cause the motor to overheat because the cooling fan becomes less effective, causing a fire hazard. The motor should be installed with a protection thermistor. If necessary, an electric forced vent fan should be used.

The values of the motor parameters set in the drive affect the protection of the motor. The default values in the drive must not be relied upon. It is essential that the correct value is entered in the Motor Rated Current parameter.

1.12 Mechanical brake control

Any brake control functions are provided to allow well co-ordinated operation of an external brake with the drive. While both hardware and software are designed to high standards of quality and robustness, they are not intended for use as safety functions, i.e. where a fault or failure would result in a risk of injury. In any application where the incorrect operation of the brake release mechanism could result in injury, independent protection devices of proven integrity must also be incorporated.

1.13 Adjusting parameters

Some parameters have a profound effect on the operation of the drive. They must not be altered without careful consideration of the impact on the controlled system. Measures must be taken to prevent unwanted changes due to error or tampering.

1.14 Electromagnetic compatibility (EMC)

Installation instructions for a range of EMC environments are provided in the relevant Power Installation Guide. If the installation is poorly designed or other equipment does not comply with suitable standards for EMC, the product might cause or suffer from disturbance due to electromagnetic interaction with other equipment. It is the responsibility of the installer to ensure that the equipment or system into which the product is incorporated complies with the relevant EMC legislation in the place of use.

2 Product information

2.1 Introduction

Open loop AC drive

Commander C200/C300 delivers maximum machine performance with open loop vector and sensorless induction motor control, for dynamic and efficient machine operation.

Features

- Enhance throughput with Machine Safety (C300 only)
- NV Media Card for parameter copying and data storage
- 24 Vdc backup supply (optional)
- EIA 485 serial communications interface (optional)
- Dual channel Safe Torque Off (STO) input (C300 only)
- Flexible machine integration through communications.

2.2 Model number

The way in which the model numbers for the Commander range are formed is illustrated below:

Figure 2-1 Model number

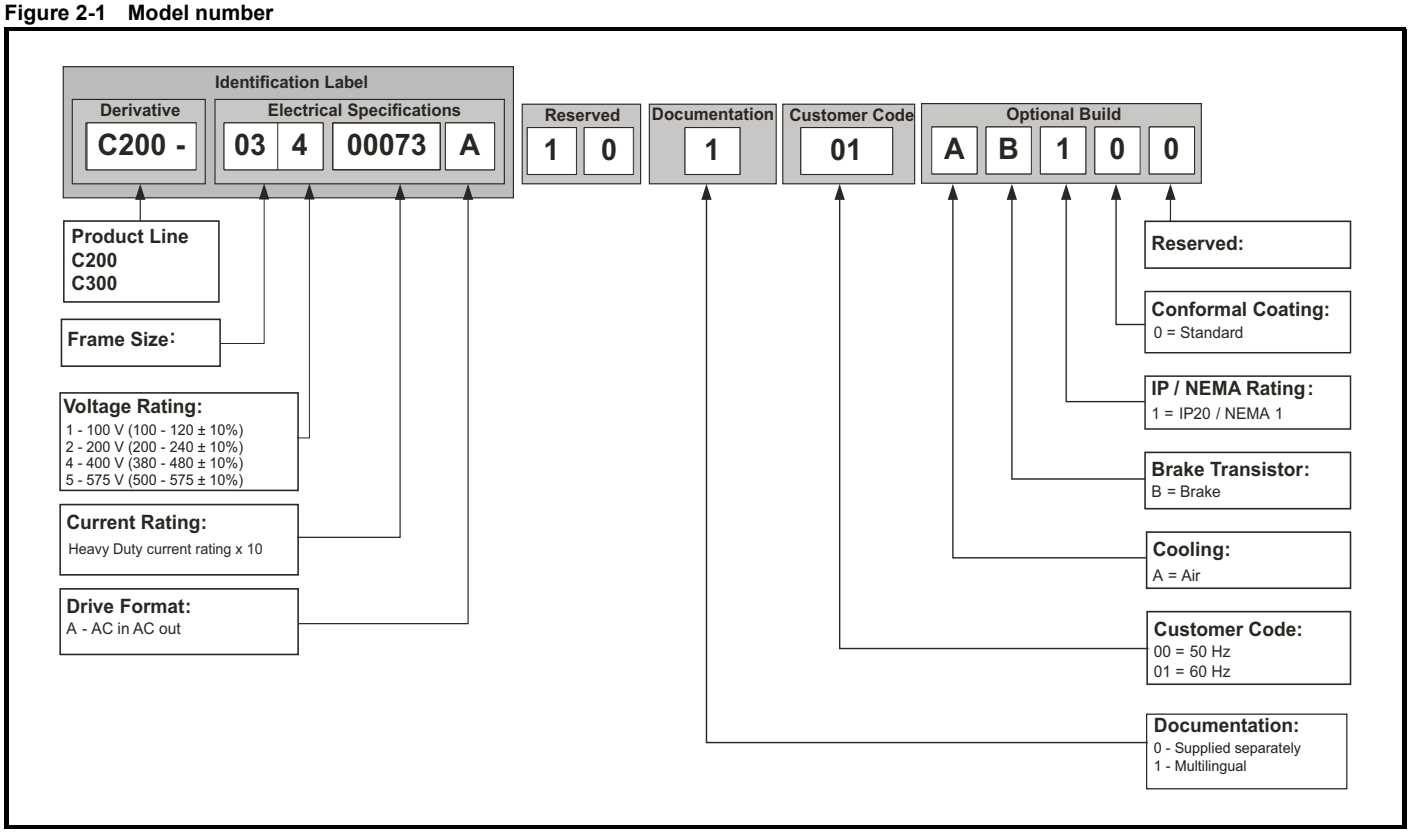

2.3 Ratings

The size 1 to 4 drive is Heavy Duty rated only.
The size 5 to 9 drive is dual rated.
The setting of the motor rated current determines which rating applies - Heavy Duty or Normal Duty.
The two ratings are compatible with motors designed to IEC60034.
The graph aside illustrates the difference between Normal Duty and Heavy Duty with respect to continuous current rating and short term overload limits.

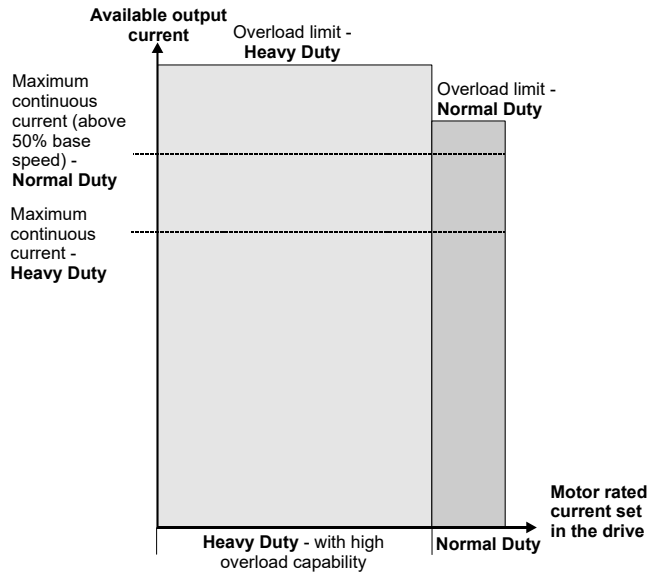

Normal Duty

For applications which use Self ventilated (TENV/TEFC) induction motors and require a low overload capability, and full torque at low speeds is not required (e.g. fans, pumps).
Self ventilated (TENV/TEFC) induction motors require increased protection against overload due to the reduced cooling effect of the fan at low speed. To provide the correct level of protection the I²t software operates at a level which is speed dependent. This is illustrated in the graph below.

NOTE

The speed at which the low speed protection takes effect can be changed by the setting of *Low Speed Thermal Protection Mode* (04.025). The protection starts when the motor speed is below 15 % of base speed when Pr **04.025** = 0 (default) and below 50 % when Pr **04.025** = 1.

Heavy Duty (default)

For constant torque applications or applications which require a high overload capability, or full torque is required at low speeds (e.g. winders, hoists).
The thermal protection is set to protect force ventilated induction motors by default.

NOTE

If the application uses a self ventilated (TENV/TEFC) induction motor and increased thermal protection is required for speeds below 50 % base speed, then this can be enabled by setting *Low Speed Thermal Protection Mode* (04.025) = 1.

Operation of motor I²t protection

Motor I²t protection is fixed as shown below and is compatible with:

- Self ventilated (TENV/TEFC) induction motors

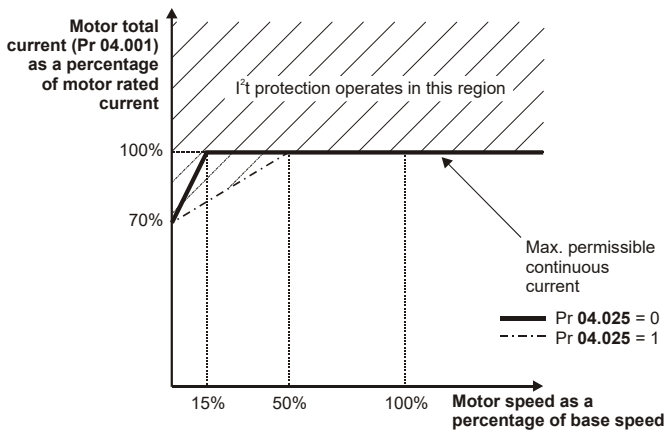

Motor I²t protection defaults to be compatible with:

- Forced ventilation induction motors

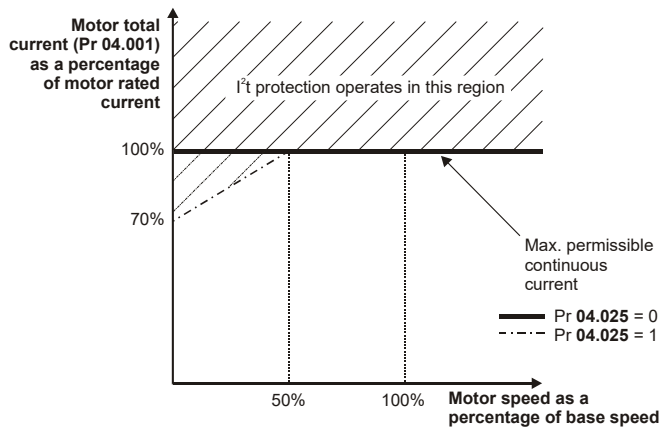

2.4 Operating modes

The drive is designed to operate in any of the following modes:

1. Open loop mode
   - Open loop vector mode
   - Fixed V/F mode (V/Hz)
   - Square V/F mode (V/Hz)
2. RFC - A
   - Without position feedback sensor

2.4.1 Open loop mode

The drive applies power to the motor at frequencies varied by the user. The motor speed is a result of the output frequency of the drive and slip due to the mechanical load. The drive can improve the speed control of the motor by applying slip compensation. The performance at low speed depends on whether V/F mode or open loop vector mode is selected.

Open loop vector mode

The voltage applied to the motor is directly proportional to the frequency except at low speed where the drive uses motor parameters to apply the correct voltage to keep the flux constant under varying load conditions.

Typically 100 % torque is available down to 1 Hz for a 50 Hz motor.

Fixed V/F mode

The voltage applied to the motor is directly proportional to the frequency except at low speed where a voltage boost is provided which is set by the user. This mode can be used for multi-motor applications.

Typically 100 % torque is available down to 4 Hz for a 50 Hz motor.

Square V/F mode

The voltage applied to the motor is directly proportional to the square of the frequency except at low speed where a voltage boost is provided which is set by the user. This mode can be used for running fan or pump applications with quadratic load characteristics or for multi-motor applications. This mode is not suitable for applications requiring a high starting torque.

2.4.2 RFC-A mode

Rotor **F**lux **C**ontrol for Asynchronous (induction) motors (RFC-A) encompasses closed loop vector control without a position feedback device

Rotor flux control provides closed loop control without the need for position feedback by using current, voltages and key motor parameters to estimate the motor speed. It can eliminate instability traditionally associated with open loop control for example when operating large motors with light loads at low frequencies.

2.5 Keypad and display

The keypad and display provide information to the user regarding the operating status of the drive and trip codes, and provide the means for changing parameters, stopping and starting the drive, and the ability to perform a drive reset.

Figure 2-2 Commander C200/C300 keypad detail

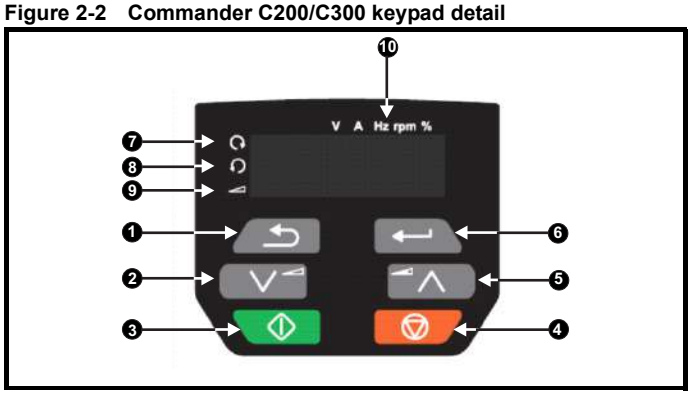

1. Escape button
2. Down button
3. Start button (green)
4. Stop / Reset button (red)
5. Up button
6. Enter button
7. Run forward indicator
8. Run reverse indicator
9. Keypad reference indicator
10. Unit indicators

2.6 Nameplate description

Figure 2-3 Typical drive rating labels size 2 (C200 shown)

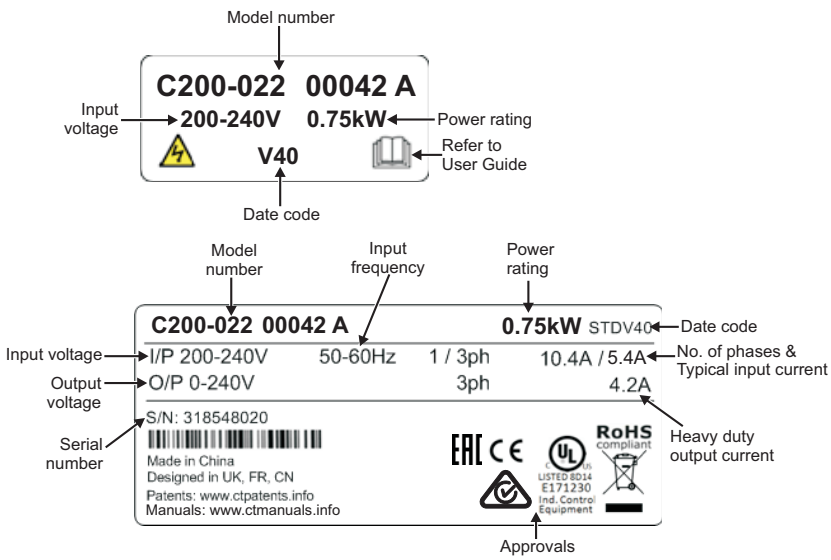

Key to approvals		
CE	CE approval	Europe
	C Tick approval	Australia
c UL us	UL / cUL approval	USA & Canada
	RoHS compliant	China
FUNCTIONAL SAFETY c UL us LISTED	Functional safety	USA & Canada
EAC	EurAsian Conformity	EurAsia

Refer to Figure 2-1 *Model number* on page 10 for further information relating to the labels.

NOTE

Date code format

The date code is four numbers. The first two numbers indicate the year and the remaining numbers indicate the week of the year in which the drive was built. This new format started in 2017.

Example:
A date code of **1710** would correspond to week 10 of year 2017.

2.7 Options

Figure 2-4 Options available with the drive

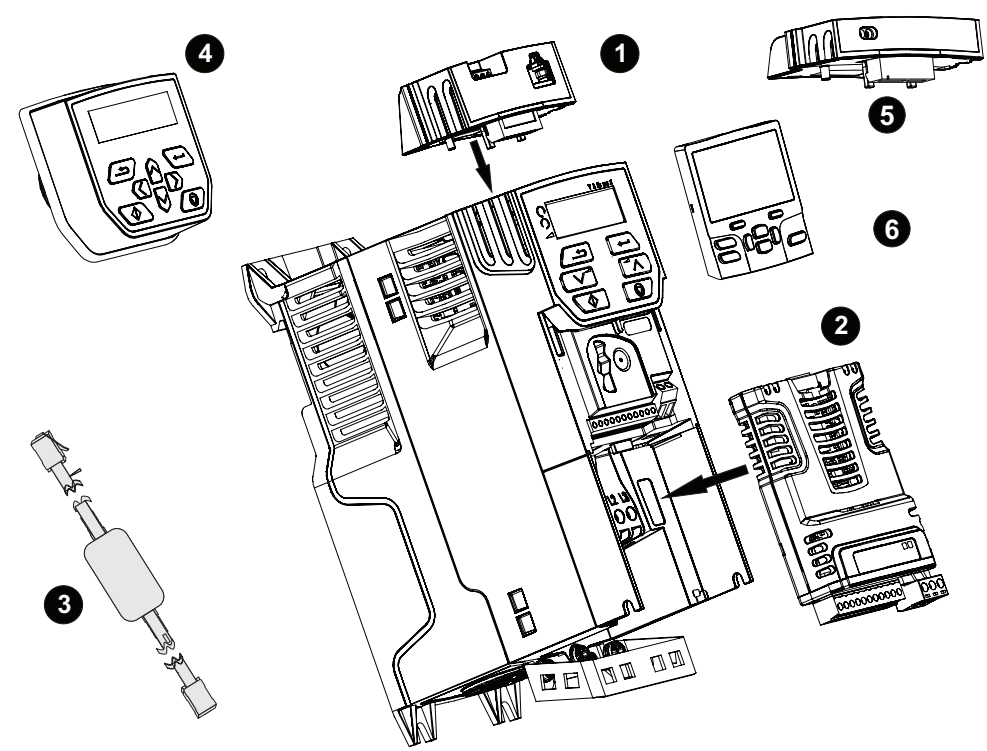

1. AI 485 Adaptor
2. Option module (SI)
3. CT USB Comms cable
4. Remote mountable LCD keypad
5. AI-Backup adaptor module
6. Remote-Keypad RTC

Table 2-1 System Integration (SI) option module identification

Type	Option module	Color	Name	Further details
Fieldbus		Purple	SI-PROFIBUS	**Profibus option** PROFIBUS adaptor for communications with the drive
		Medium Grey	SI-DeviceNet	**DeviceNet option** DeviceNet adaptor for communications with the drive
		Light Grey	SI-CANopen	**CANopen option** CANopen adaptor for communications with the drive
		Yellow Green	SI-PROFINET V2	**PROFINET V2 option** PROFINET V2 adapter for communications with the drive
		Beige	SI-Ethernet	**Ethernet option** External Ethernet module that supports EtherNet/IP, Modbus TCP/IP and RTMoE. The module can be used to provide global connectivity and integration with IT network technologies, such as wireless networking
		Brown Red	SI-EtherCAT	**EtherCAT option** EtherCAT adapter for communications with the drive
Automation (I/O expansion)		Orange	SI-I/O	**Extended I/O** Increases the I/O capability by adding the following combinations: • Digital I/O • Digital Inputs • Analog Inputs (differential or single ended) • Relays

Table 2-2 Adaptor Interface (AI) option module identification

Type	Option module	Name	Further details
Communications	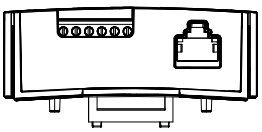	AI-485 adaptor	**EIA 485 serial communications option** Provides a EIA 485 serial communications interface via an RJ45 connector or alternative screw terminals.
		AI-485 24V adaptor	**EIA 485 serial communications option** Provides a EIA 485 serial communications interface via an RJ45 connector or alternative screw terminals. It also provides a 24 V Backup supply input.
Backup	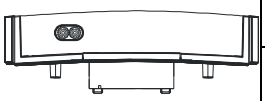	AI-Backup adaptor	**+24 V Backup and SD card interface** Provides a +24 V Backup supply input and SD card interface
		AI-Smart adaptor	**+24 V Backup and SD card interface** Supplied with 4 GB SD card for parameter copying and an input for 24 V Backup

Table 2-3 Keypad identification

Type	Keypad	Name	Further Details
Keypad		Remote-Keypad	**Remote LCD keypad option** Remote Keypad with a LCD display
		Remote-Keypad RTC	**Remote LCD keypad option** Remote Keypad with a LCD display and real time clock

3 Mechanical installation

3.1 Installing / removing options

CAUTION

Power down the drive before installing / removing the SI option module. Failure to do so may result in damage to the product.

Figure 3-1 Installation of an SI option module (size 2 to 4)

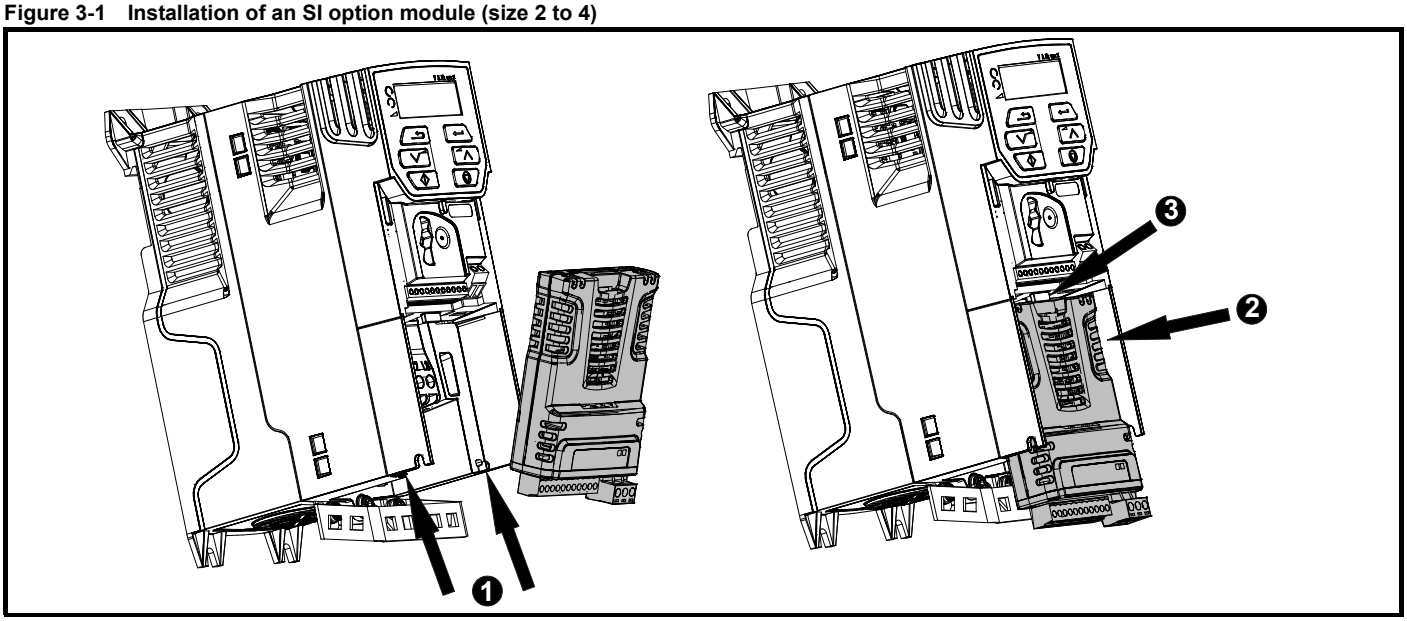

- With the option module tilted slightly backwards, align and locate the two holes in the rear of the option module onto the two tabs (1) on the drive.
- Press the option module onto the drive as shown in (2) until the connector mates with the drive, ensuring that the tab (3) retains the option module in place.

NOTE

Check that the option module is securely located on the drive. Always ensure that the terminal cover is always replaced before use as this ensures that the option module is firmly secured.

Figure 3-2 Removal of an SI option module (size 2 to 4)

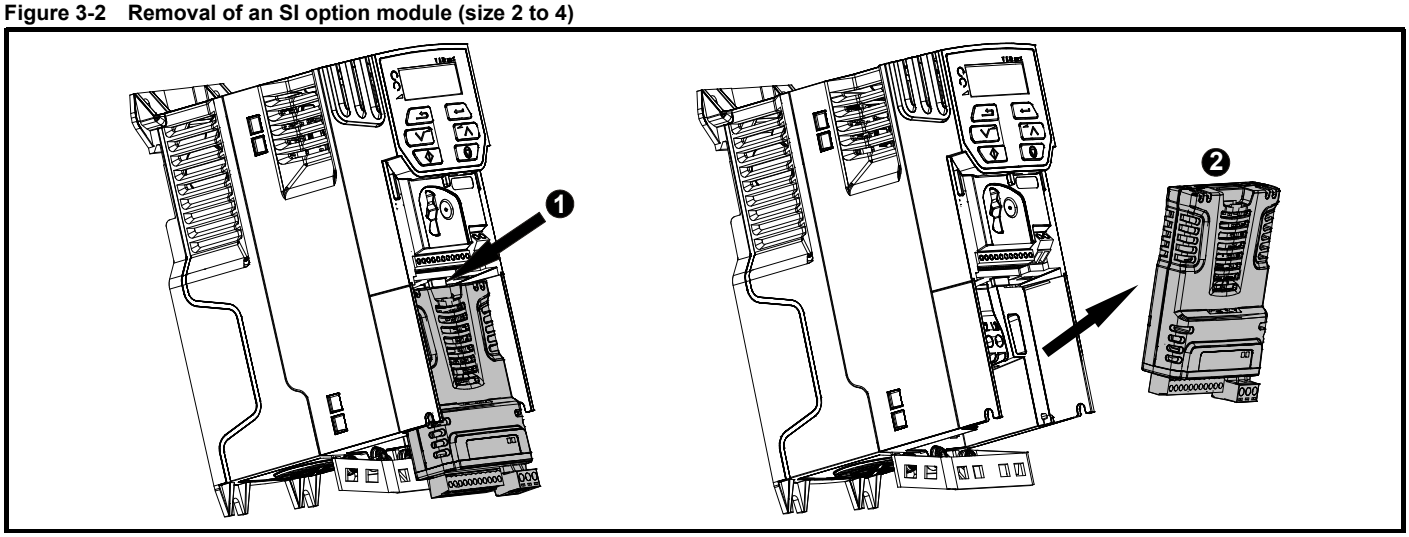

- Press down on the tab (1) to release the option module from the drive housing as shown.
- Tilt the option module slightly towards you and pull away from the drive housing (2).

Figure 3-3 Installation of an SI option module (size 5 to 9)

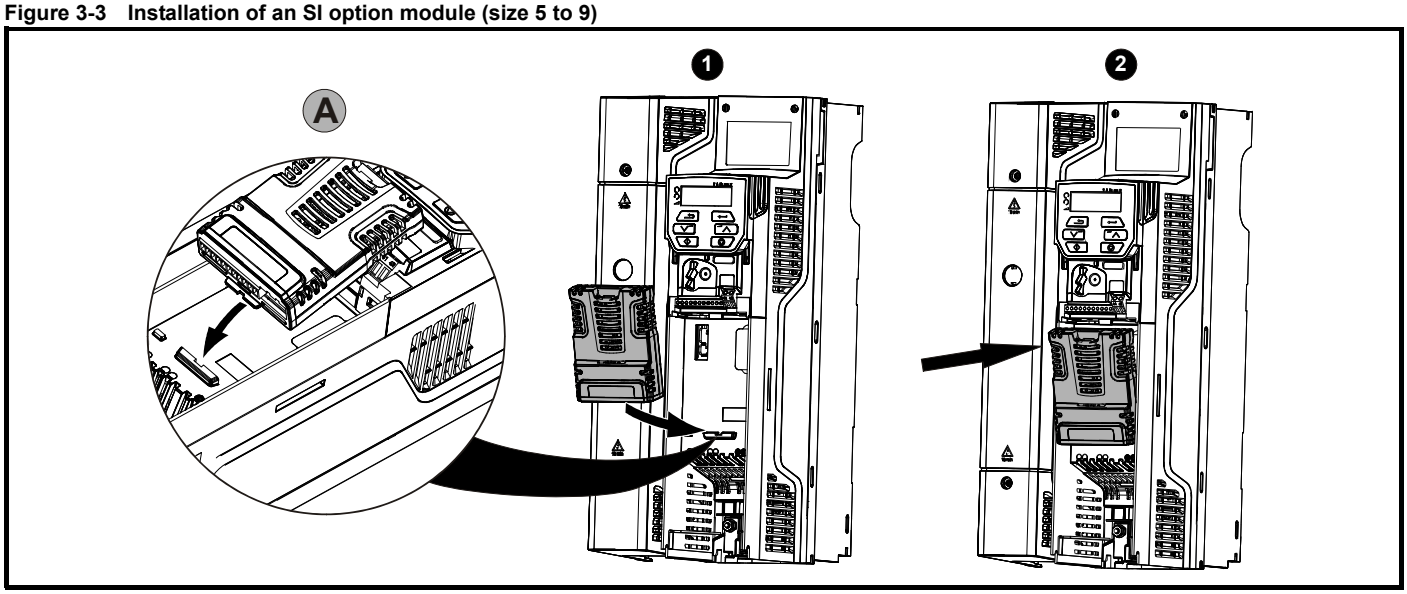

- Move the option module in the direction shown (1).
- Align and insert the option module tab into the slot provided (2), This is shown in the detailed view (A).
- Press down on the option module until it clicks in place.

Figure 3-4 Removal of an SI option module (size 5 to 9)

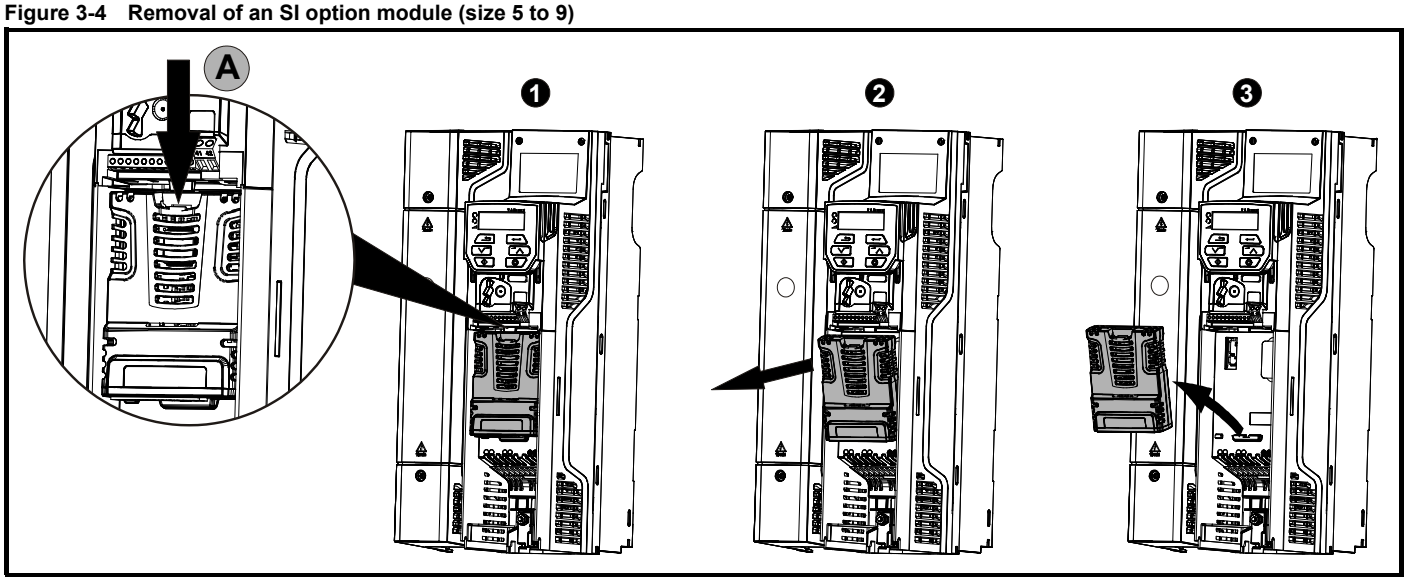

- To release the option module from the drive housing, press down on the tab (1) as shown in detailed view (A).
- Tilt the option module towards you as shown in (2).
- Remove the option module by lifting away from the drive as shown in (3).

Figure 3-5 Installing the AI-485 / AI-Backup Adaptor to the drive (AI-485 Adaptor shown)

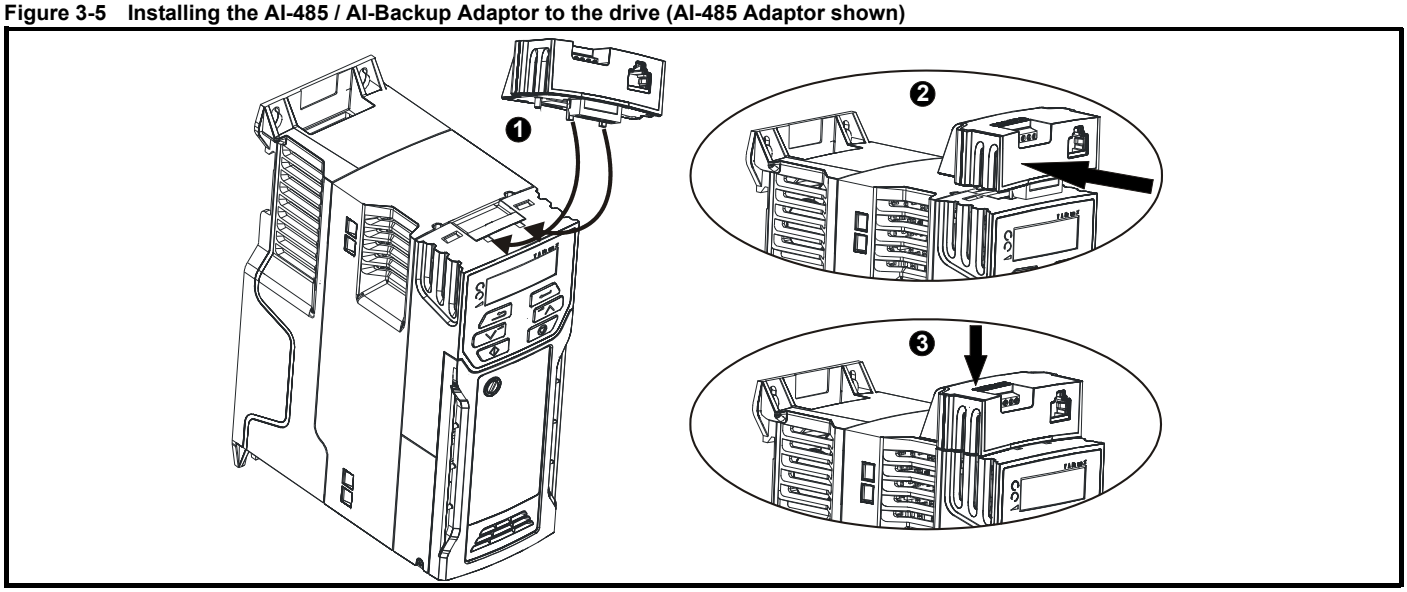

- Identify the two plastic fingers on the underside of the AI-485 / AI-Backup Adaptor (1) - then insert the two fingers into the corresponding slots in the spring loaded sliding cover on the top of the drive.
- Hold the adaptor firmly and push the spring loaded protective cover towards the back of the drive to expose the connector block (2) below.
- Press the adaptor downwards (3) until the adaptor connector locates into the drive connection below.

Figure 3-6 Removal of the AI-485 Adaptor / AI-Backup (AI-485 Adaptor shown)

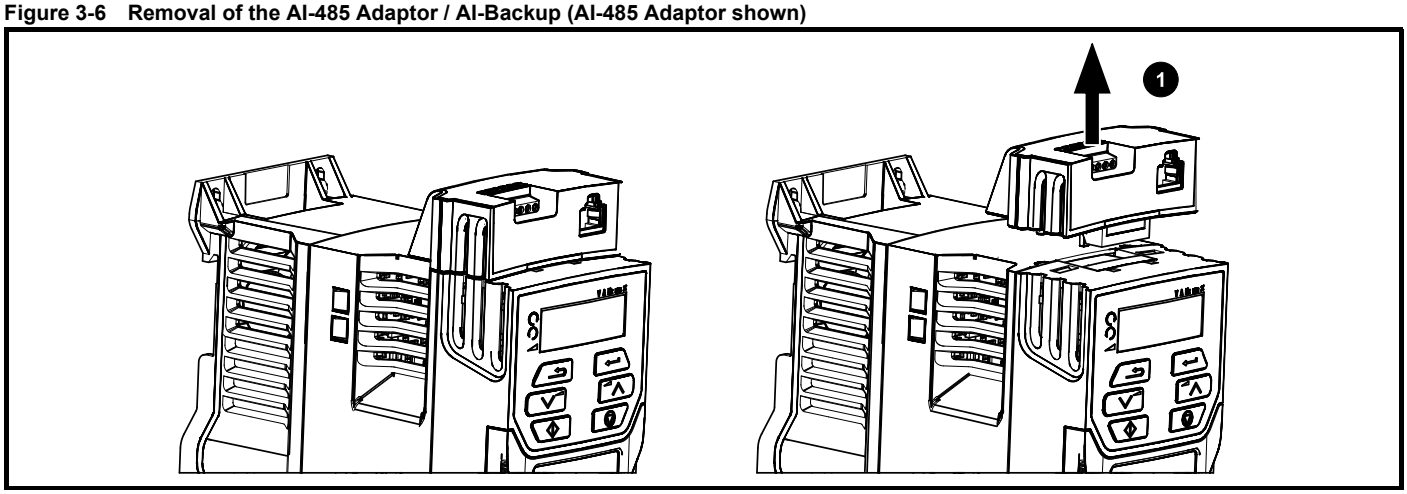

- To remove the AI-485 / AI-Backup adaptor, pull it up and away from the drive in the direction shown (1)

3.2 Real time clock battery replacement

Those keypads which have the real time clock feature contain a battery to ensure the clock works when the drive is powered down. The battery has a long life time but if the battery needs to be replaced or removed, follow the instructions below.

Low battery voltage is indicated by low battery symbol on the keypad display.

Figure 3-7 Remote Keypad RTC (rear view)

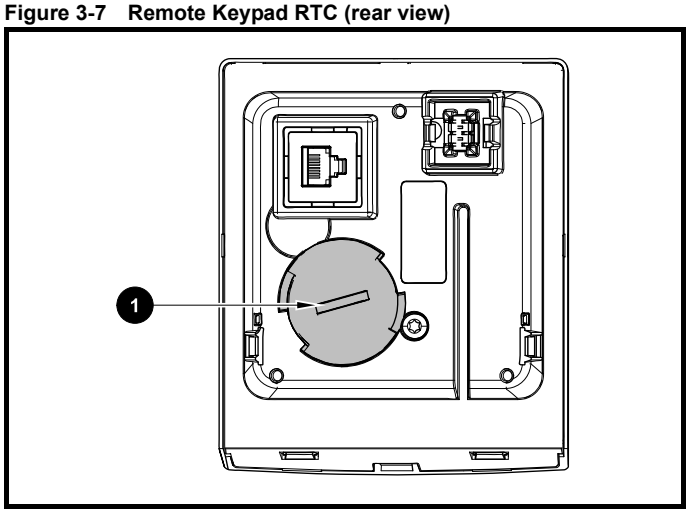

Figure 3-7 above illustrates the rear view of the Remote Keypad RTC.

1. To remove the battery cover insert a flat head screwdriver into the slot as shown (1), push and turn anti-clockwise until the battery cover is released.
2. Replace the battery (the battery type is: CR2032).
3. Reverse point 1 above to replace battery cover.

NOTE

Ensure the battery is disposed of correctly.

4 Electrical installation

4.1 24 Vdc supply

The 24 Vdc supply connected to the +24 V supply terminals on the AI-Backup adaptor provides the following functions:

- It can be used as a back-up power supply to keep the control circuits of the drive powered up when the line power supply is removed. This allows any fieldbus modules or serial communications to continue to operate. If the line power supply is re-applied, then the normal operation can carry on after the drive automatically re-initializes the power board parameters.
- It can be used to clone or load parameters in order to pre-configure drives when the line power supply is not available. The keypad can be used to setup parameters if required. However, the drive will be in the Under Voltage state unless the line power supply is enabled, therefore diagnostics may not be possible. (Power down save parameters are not saved when using the 24 V back-up power supply input).

The working voltage range of the 24 V back-up power supply is as follows:

0V	**0V (connected internally to 0V common - Control terminal 1)**
+ 24 V	**+ 24 V Backup supply input**
Nominal operating voltage	24.0 Vdc
Minimum continuous operating voltage	19.2 V
Maximum continuous operating voltage	30.0 V
Minimum start up voltage	12.0 V
Minimum power supply requirement at 24 V	20 W
Maximum power supply continuous current	3 A
Recommended fuse	1 A, 50 Vdc

Minimum and maximum voltage values include ripple and noise. Ripple and noise values must not exceed 5 %.

Figure 4-1 Location of the 24 Vdc power supply connection on the AI-Backup adaptor

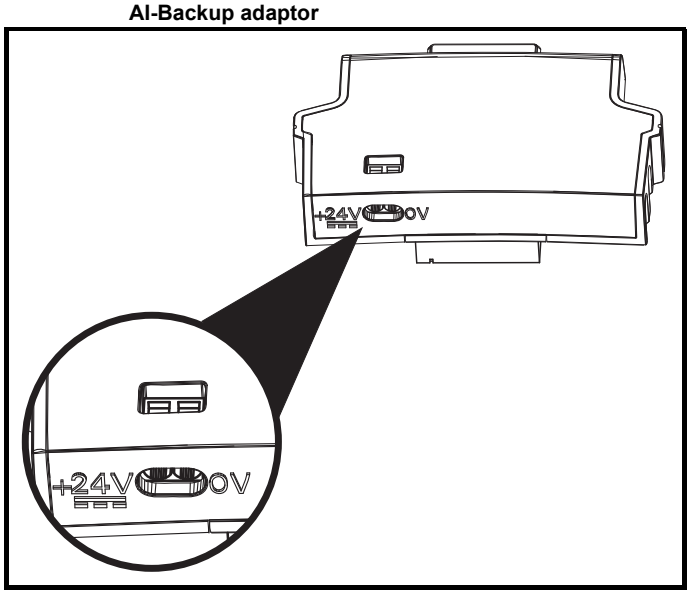

NOTE

The 24 Vdc Backup supply can be used on all frame sizes.

4.2 Communication connections

Installing an AI-485 Adaptor provides the drive with a 2 wire EIA 485 serial communications interface. This enables the drive set-up, operation and monitoring to be carried out with a PC or controller as required.

Figure 4-2 Location of the AI-485 Adaptor option

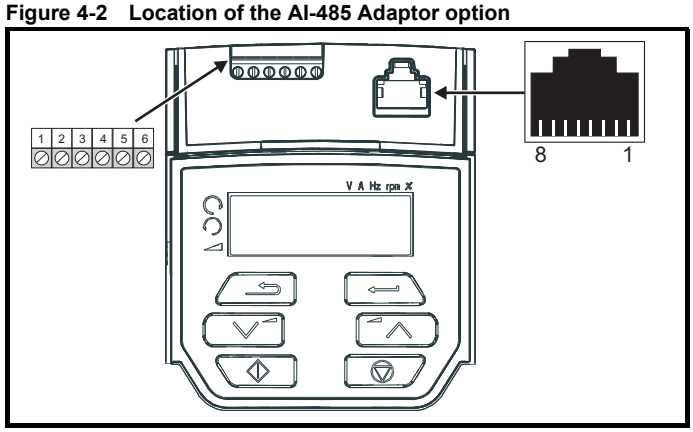

4.2.1 EIA 485 serial communications

The drive only supports Modbus RTU protocol. See Table 4-1 for the connection details.

NOTE

Standard Ethernet cables **must not be used** when connecting drives on a EIA 485 network as they do not have the correct twisted pairs for the pinout of the serial comms port.

Table 4-1 Serial communication port pin-outs (RJ45)

Pin	Function
1	120 Ω Termination resistor
2	RX TX
3	0V
4	+24 V (100 mA) output
5	Not connected
6	TX enable
7	RX\ TX\
8	RX\ TX\ (if termination resistors are required, link to pin 1)

Minimum number of connections are 2, 3, 7 and shield.

Table 4-2 Serial communication port pin-outs (screw terminal block)

Pin	Function
1	0V
2	RX\ TX\ (if termination resistor required, link to pin 4)
3	RX TX
4	120 Ω Termination resistor
5	TX Enable
6	+24 V (100 mA) output

NOTE

The connections on the RJ45 connector and terminal block are in parallel.

4.2.2 Isolation of the EIA 485 serial communication port

The serial communication port is single insulated and meets the requirements for ELV.

WARNING

When using the communications port with a personal computer or centralised controller e.g. PLC, an isolation device must be included with a rated voltage at least equal to the drive supply voltage. Ensure that the correct fuses are installed at the drive input, and that the drive is connected to the correct supply voltage.
If a serial communications converter other than the CT Comms cable is used to connect to other circuits classified as Safety Extra Low Voltage (SELV) (e.g. to a personal computer), then a safety isolating barrier must be included to maintain the SELV classification.

An isolated serial communications lead has been designed to connect the drive to IT equipment (such as laptop computers), and is available from the supplier of the drive. See below for details:

Table 4-3 Isolated serial comms lead details

Part number	Description
4500-0096	CT USB Comms cable

The “isolated serial communications” lead has reinforced insulation as defined in IEC60950 for altitudes up to 3,000 m.

4.3 Control connections

4.3.1 General

Table 4-4 The control connections consist of:

Function	Qty	Control parameters available	Terminal number
Single ended analog input	2	Mode, offset, invert, scaling, destination	2, 5
Analog output	1	Source, mode, scaling,	7
Digital input	5	Destination, invert	5, 11, 12, 13, 14
Digital input / output	1	Input / output mode select, destination / source, invert	10
Frequency input	1	Maximum reference, input limit, scaling, destination	14
PWM or frequency output	1	Source, scaling, maximum output frequency, mode	10
Motor thermistor input	1	Mode, type, trip threshold, reset threshold	14
Relay	1	Source, invert	41
Drive enable (Safe Torque Off)	2		31 (STO 2 input), 34 (STO 1 input) [frame 1- 4] 31 (STO 1 input), 35 (STO 2 input) [frame 5 - 9]
+10 V User output	1		4
+24 V User output	1		9
0V common	1		1
0V Safe Torque Off	2		32 (0 V STO 2), 33 (0 V STO 1) [frame 1- 4] 32 (0 V STO 1), 36 (0 V STO 2) [frame 5 - 9]

NOTE

The 0V terminals on the Safe Torque Off are isolated from each other and the 0V common (size 1 to 4). The 0V terminals of the Safe Torque Off function on size 5 to 9 are common with the user 0V terminals.

Key:

Destination parameter:	Indicates the parameter which is being controlled by the terminal / function
Source parameter:	Indicates the parameter being output by the terminal
Mode parameter:	Analog - indicates the mode of operation of the terminal, i.e. voltage 0-10 V, current 4-20 mA etc. Digital - indicates the mode of operation of the terminal, (the Drive Enable terminal is fixed in positive logic).

All analog terminal functions can be programmed in menu 7.

All digital terminal functions (including the relay) can be programmed in menu 8.

WARNING

The control circuits are isolated from the power circuits in the drive by basic insulation (single insulation) only. The installer must ensure that the external control circuits are insulated from human contact by at least one layer of insulation (supplementary insulation) rated for use at the AC supply voltage.

WARNING

If the control circuits are to be connected to other circuits classified as Safety Extra Low Voltage (SELV) (e.g. to a personal computer), an additional isolating barrier must be included in order to maintain the SELV classification.

CAUTION

If any of the digital inputs (including the drive enable input) are connected in parallel with an inductive load (i.e. contactor or motor brake) then suitable suppression (i.e. diode or varistor) should be used on the coil of the load. If no suppression is used then over voltage spikes can cause damage to the digital inputs and outputs on the drive.

NOTE

Any signal cables which are carried inside the motor cable (i.e. motor thermistor, motor brake) will pick up large pulse currents via the cable capacitance. The shield of these signal cables must be connected to ground close to the point of exit of the motor cable, to avoid this noise current spreading through the control system.

NOTE

The Safe Torque Off drive enable terminals are positive logic input only (see Figure 4-4 on page 21).

Figure 4-3 Default terminal functions

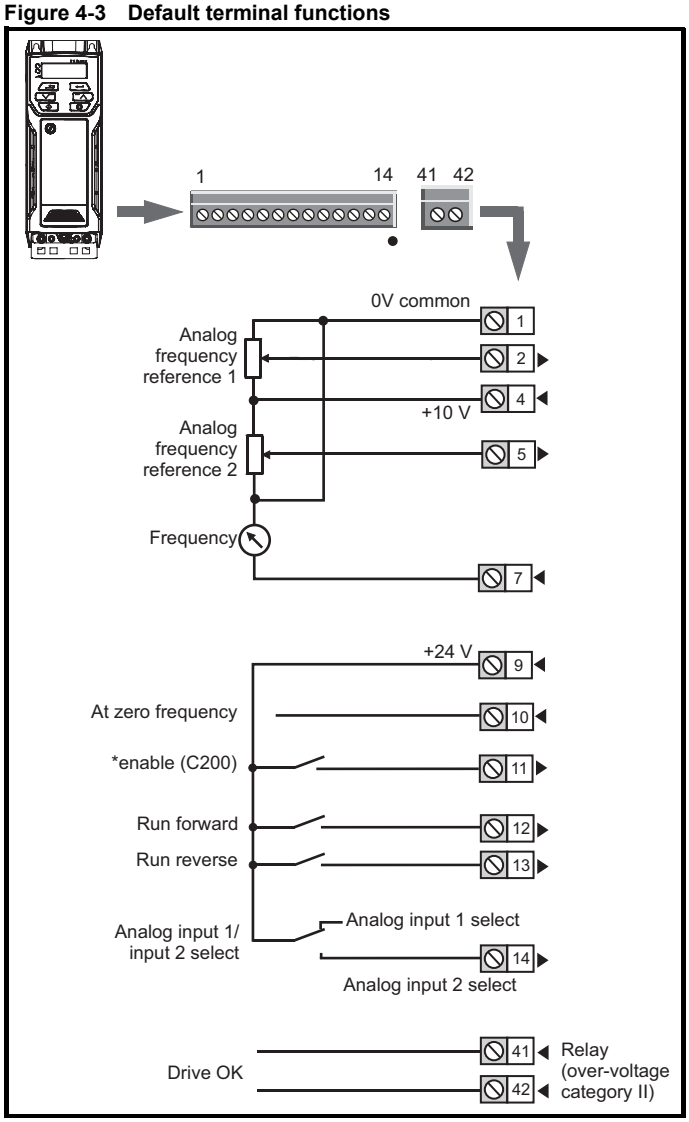

*C300 uses 'Safe Torque Off' so terminal 11 is unassigned on the Commander C300.

Figure 4-4 Safe Torque Off inputs (size 1 to 4) C300 only

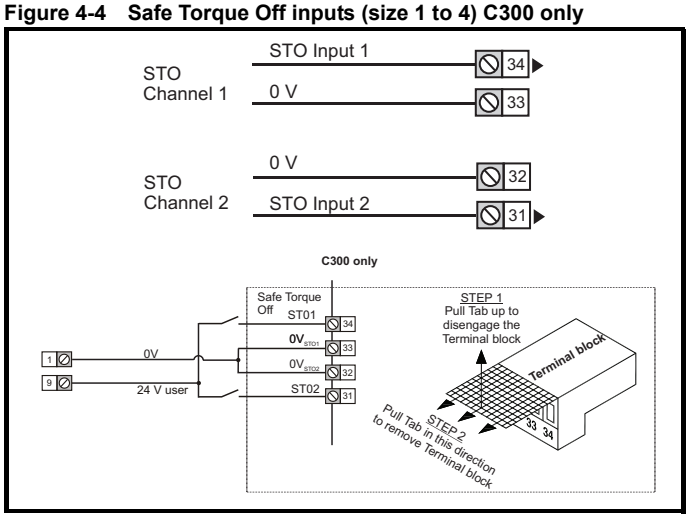

Figure 4-5 Safe Torque Off inputs (size 5 to 9) C300 only

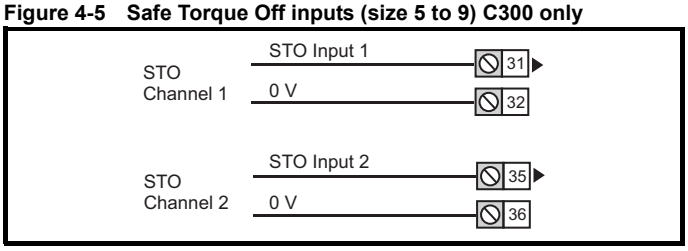

4.3.2 Control terminal specification

1	0V common
Function	**Common connection for all external devices**

2	Analog input 1
Default function	**Frequency reference**
Type of input	Unipolar single-ended analog voltage or unipolar current
Mode controlled by…	Pr **07.007**
Operating in voltage mode (default)	
Full scale voltage range	0V to +10 V ±3 %
Maximum offset	±30 mV
Absolute maximum voltage range	-18 V to +30 V relative to 0V
Input resistance	100k Ω
Operating in current mode	
Current ranges	0 to 20 mA ±5 %, 20 to 0 mA ±5 %, 4 to 20 mA ±5 %, 20 to 4 mA ±5 %
Maximum offset	250 µA
Absolute maximum voltage (reverse bias)	-18 V to +30 V relative to 0V
Absolute maximum current	25 mA
Equivalent input resistance	165 Ω
Common to all modes	
Resolution	11 bits
Sample rate	4 ms

4	+10 V user output
Default function	**Supply for external analog devices**
Nominal voltage	10.2 V
Voltage tolerance	±3 %
Maximum output current	5 mA

5	Analog input 2
Default function	**Frequency reference**
Type of input	Unipolar single-ended analog voltage or positive logic only digital input
Mode controlled by....	Pr **07.011**
Operating in voltage mode (default)	
Full scale voltage range	0V to +10 V ±3 %
Maximum offset	±30 mV
Absolute maximum voltage range	-18 V to +30 V relative to 0V
Input resistance	100 k Ω
Resolution	11 bits
Sample rate	4 ms
Operating in digital mode	
Absolute maximum voltage range	-18 V to +30 V relative to 0V
Impedance	6.8 k Ω
Input threshold	10 V ±0.8 V (IEC 61131-2)
Sample rate	1 ms when routed to destinations Pr **06.035** or Pr **06.036**, otherwise 4 ms.

7	Analog output 1
Default function	**Frequency output**
Type of output	Unipolar single-ended analog voltage
Voltage range	+10 V
Maximum offset	15 mV
Load resistance	≥ 2k Ω
Protection	Short circuit relative to 0V
Resolution	0.1 %
Sample rate	4 ms

9	+24 V user output
Default function	**Supply for external digital devices**
Voltage tolerance	±20 %
Maximum output current	100 mA
Protection	Current limit and trip

10	Digital I/O 1
Default function	**AT ZERO FREQUENCY output**
Type	Positive logic digital input, positive logic voltage source output. PWM or frequency output modes can be selected.
Input / output mode controlled by …	Pr **08.031**
Operating as in input	
Absolute maximum applied voltage range	-8 V to +30 V relative to 0V
Impedance	6.8 kΩ
Input threshold	10 V ±0.8 V (IEC 61131-2)
Operating as an output	
Nominal maximum output current	50 mA
Maximum output current	100 mA (total including +24 Vout)
Common to all modes	
Voltage range	0V to +24 V
Sample rate	1 ms when routed to destinations Pr **06.035** or Pr **06.036**, otherwise 4 ms

11 12 13	Digital Input 2 Digital Input 3 Digital Input 4
Terminal 11 default function	**C200: Enable** **C300: Unassigned**
Terminal 12 default function	**RUN FORWARD input**
Terminal 13 default function	**RUN REVERSE input**
Type	Positive logic only digital inputs
Voltage range	0V to +24 V
Absolute maximum applied voltage range	-18 V to +30 V relative to 0V
Impedance	6.8 kΩ
Input threshold	10 V ±0.8 V (IEC 61131-2)
Sample rate	1 ms when routed to destinations Pr 06.035 or Pr 06.036, otherwise 4 ms.

14	Digital Input 5
Terminal 14 default function	**Analog INPUT 1 / INPUT 2 select**
Type	Positive logic only digital input. Frequency input or motor thermistor input (bias for DIN44081 ptc, KTY84, PT1000, PT2000 and other types) mode can be selected
Voltage range	0V to +24 V
Absolute maximum applied voltage range	-18 V to +30 V relative to 0V
Impedance	6.8 kΩ
Input threshold	10 V ±0.8 V (IEC 61131-2)
Sample rate	1 ms when routed to destinations Pr **06.035** or Pr **06.036**, otherwise 4 ms.

31 34	Safe Torque Off function (drive enable) (Frame 1 to 4)
Type	Positive logic only digital input
Voltage range	0 to +24 V
Absolute maximum applied voltage	30 V
Logic Threshold	10 V ±5 V
Low state maximum voltage for disable to SIL3 and PL e	5 V
Impedance	>4 mA @ 15 V, <15 mA @30 V (IEC 61131-2, type 1)
Low state maximum current for disable to SIL3 and PL e	0.5 mA
Response time	Nominal: 12 ms Maximum: 20 ms

The Safe Torque Off function may be used in a safety-related application in preventing the drive from generating torque in the motor to a high level of integrity. The system designer is responsible for ensuring that the complete system is safe and designed correctly according to the relevant safety standards. If the Safe Torque Off function is not required, these terminal are used for enabling the drive.

41 42	Relay contacts
Default function	**Drive OK indicator**
Contact voltage rating	240 Vac, Installation over-voltage category II
Contact maximum current rating	2 A AC 240 V 4 A DC 30 V resistive load 0.5 A DC 30 V inductive load (L/R = 40 ms)
Contact minimum recommended rating	12 V 100 mA
Contact type	Normally open
Default contact condition	Closed when power applied and drive OK
Update rate	1 ms

32	0V STO2 (Frame 1 to 4) C300 only
Function	Common connection for STO2

33	0V STO1 (Frame 1 to 4) C300 only
Function	Common connection for STO1

31 35	**Safe Torque Off function (drive enable) C300 only (Frame 5 to 9)**
Type	Positive logic only digital input
Voltage range	0 to +24 V
Absolute maximum applied voltage	30 V
Logic Threshold	10 V ±5 V
Low state maximum voltage for disable to SIL3 and PL e	5 V
Impedance	>4 mA @ 15 V (IEC 61131-2, type 1, 3.3 kΩ)
Low state maximum current for disable to SIL3 and PL e	0.5 mA
Response time	Nominal: 6 ms Maximum: 20 ms
The Safe Torque Off function may be used in a safety-related application in preventing the drive from generating torque in the motor to a high level of integrity. The system designer is responsible for ensuring that the complete system is safe and designed correctly according to the relevant safety standards. If the Safe Torque Off function is not required, these terminal are used for enabling the drive.	

32	**0V STO1 (Frame 5 to 9) C300 only**
Function	Common connection for STO1

36	**0V STO2 (Frame 5 to 9) C300 only**
Function	Common connection for STO2

WARNING

To prevent the risk of a fire hazard in the event of a fault, a fuse or other over-current protection must be installed in the relay circuit.

4.4 Safe Torque Off (STO) (C300 only)

The Safe Torque Off function provides a means for preventing the drive from generating torque in the motor, with a very high level of integrity. It is suitable for incorporation into a safety system for a machine. It is also suitable for use as a conventional drive enable input.

The safety function is active when the STO input is in the logic-low state as specified in the control terminal specification. The function is defined according to EN 61800-5-2 and IEC 61800-5-2 as follows. (In these standards a drive offering safety-related functions is referred to as a PDS(SR)):

'Power that can cause rotation (or motion in the case of a linear motor) is not applied to the motor. The PDS(SR) will not provide energy to the motor which can generate torque (or force in the case of a linear motor)'

This safety function corresponds to an uncontrolled stop in accordance with stop category 0 of IEC 60204-1.

The Safe Torque Off function makes use of the special property of an inverter drive with an induction motor, which is that torque cannot be generated without the continuous correct active behaviour of the inverter circuit. All credible faults in the inverter power circuit cause a loss of torque generation.

The Safe Torque Off function is fail-safe, so when the Safe Torque Off input is disconnected the drive will not operate the motor, even if a combination of components within the drive has failed. Most component failures are revealed by the drive failing to operate. Safe Torque Off is also independent of the drive firmware. This meets the requirements of the following standards, for the prevention of operation of the motor.

Machinery Applications

The Safe Torque Off function has been independently assessed by Notified Body, TüV Rheinland for use as a safety component of a machine:

Prevention of unintended motor operation: The safety function "Safe Torque Off" can be used in applications up to Cat 4. PL e according to EN ISO 13849-1, SIL 3 according to EN 61800-5-2/ EN 62061/ IEC 61508 and in lift applications according to EN 81-1 and EN81-2.

Type examination certificate number	Date of issue	Models	Frame sizes
01/205/5387.02/18	2018-08-16	C300	5 to 9
01/205/5383.03/18	2018-08-16	C300	1 to 4

This certificate is available for download from the TüV Rheinland website at: http://www.tuv.com

Safety Parameters as verified by TüV Rheinland:

According to IEC 61508-1 to 07 / EN 61800-5-2 / EN 62061

Type	Value	Percentage of SIL 3 allowance	Frame sizes
Proof test interval	20 years		All
High demand or a continuous mode of operation			
PFH (1/h)	9.61×10^{-11} 1/h	< 1 %	1 to 4
PFH (1/h)	4.16×10^{-11} 1/h	< 1 %	5 to 9
Low demand mode of operation (not EN61800-5-2)			
PFDavg	8.4×10^{-6}	< 1 %	1 to 4
PFDavg	3.64×10^{-6}	< 1 %	5 to 9

According to EN ISO 13849-1

Type	Value	Classification
Category	4	
Performance Level (PL)	e	
$MTTF_D$ (STO1)	>2500 years	High
$MTTF_D$ (STO2)	>2500 years	High
$MTTF_D$ (Single channel STO)	>2500 years	High
DC_{avg}	≥99 %	High
Mission time	20 years	

NOTE

Logic levels comply with IEC 61131-2:2007 for type 1 digital inputs rated at 24 V. Maximum level for logic low to achieve SIL3 and PL e 5 V and 0.5 mA.

Lift (Elevator) Applications

The Safe Torque function has been independently assessed for use as a safety component in lift (elevator) applications by Notified Body, TüV Nord:

The drives Commander series with safe torque off (STO) function if applied according to the “Conditions of application” fulfil the safety requirements of the standards EN81-1, EN81-2, EN 81-50 and EN60664-1and are in conformity with all relevant requirements of the Directive 95/16/EC.

Certificate of Conformity number	Date of issue	Models
44 799 13196202	2015-04-08	C300

The Safe Torque Off function can be used to eliminate electro-mechanical contactors, including special safety contactors, which would otherwise be required for safety applications.

For further information contact the supplier of the drive.

UL Approval

The Safe Torque Off function has been independently assessed by Underwriters Laboratories (UL). The on-line certification (yellow card) reference is: FSPC.E171230.

Safety Parameters as verified by UL:

According to IEC 61508-1 to 7

Type	Value
Safety Rating	SIL 3
SFF	> 99%
PFH (1/h)	4.43×10^{-10} 1/h (< 1% of SIL 3 allowance)
HFT	1
Beta Factor	2 %
CCF	Not applicable

According to EN ISO 13849-1

Type	Value
Category	4
Performance Level (PL)	e
$MTTF_D$	2574 years
Diagnostic coverage	High
CCF	65

Two-channel Safe Torque Off

The Commander C300 models have dual channel STO.

The dual channel STO has two fully independent channels.

Each input meets the requirements of the standards as defined above.

If either or both inputs are set at a logic low state, there are no single faults in the drive which can permit the motor to be driven.

It is not necessary to use both channels to meet the requirements of the standards. The purpose of the two channels is to allow connection to machine safety systems where two channels are required, and to facilitate protection against wiring faults.

For example, if each channel is connected to a safety-related digital output of a safety related controller, computer or PLC, then on detection of a fault in one output the drive can still be disabled safely through the other output.

Under these conditions, there are no single wiring faults which can cause a loss of the safety function, i.e. inadvertent enabling of the drive.

In the event that the two-channel operation is not required, the two inputs can be connected together to form a single Safe Torque Off input.

In this case it is important to note that a single short-circuit from the Safe Torque Off input to a DC supply > 5 V could cause the drive to be enabled.

This might occur through a fault in the wiring. This can be excluded according to EN ISO 13849-2 by the use of protected wiring. The wiring can be protected by either of the following methods:

- By placing the wiring in a segregated cable duct or other enclosure.

or

- By providing the wiring with a grounded shield in a positive-logic grounded control circuit. The shield is provided to avoid a hazard from an electrical fault. It may be grounded by any convenient method; no special EMC precautions are required.

Note on response time of Safe Torque Off, and use with safety controllers with self-testing outputs:

Safe Torque Off has been designed to have a response time of greater than 1 ms so that it is compatible with safety controllers whose outputs are subject to a dynamic test with a pulse width not exceeding 1 ms.

WARNING

The design of safety-related control systems must only be done by personnel with the required training and experience. The Safe Torque Off function will only ensure the safety of a machine if it is correctly incorporated into a complete safety system. The system must be subject to a risk assessment to confirm that the residual risk of an unsafe event is at an acceptable level for the application

WARNING

Safe Torque Off does not provide electrical isolation. The supply to the drive must be disconnected by an approved isolation device before gaining access to power connections.

WARNING

Safe Torque Off inhibits the operation of the drive, this includes inhibiting braking. If the drive is required to provide both braking and Safe Torque Off in the same operation (e.g. for emergency stop) then a safety timer relay or similar device must be used to ensure that the drive is disabled a suitable time after braking. The braking function in the drive is provided by an electronic circuit which is not fail-safe. If braking is a safety requirement, it must be supplemented by an independent fail-safe braking mechanism.

WARNING

It is essential to observe the maximum permitted voltage of 5 V for a safe low (disabled) state of Safe Torque Off. The connections to the drive must be arranged so that voltage drops in the 0V wiring cannot exceed this value under any loading condition. It is strongly recommended that the Safe Torque Off circuits be provided with a dedicated 0V conductors which should be connected to terminals 32 and 33 (sizes 1 to 4) and terminals 32 and 36 (sizes 5 to 9) at the drive.

Safe Torque Off over-ride

The drive does not provide any facility to over-ride the Safe Torque Off function, for example for maintenance purposes.

5 Getting started

This chapter introduces the user interfaces, menu structure and security levels of the drive.

5.1 Understanding the display

5.1.1 Keypad

The keypad display consists of a 6 digit LED display. The display shows the drive status or the menu and parameter number currently being edited.

The option module menu (S.mm.ppp) is only displayed if the option module is installed. Where S signifies the option module slot number and the mm.ppp signifies the menu and parameter number of the option module's internal menus and parameter.

The display also includes LED indicators showing units and status as shown in Figure 5-1.

When the drive is powered up, the display will show the power up parameter defined by *Parameter Displayed At Power-Up* (11.022).

NOTE

The values in the *Status Mode Parameters* (Pr **22** and Pr **23**) shown on the display when the drive is running, can be toggled by using the escape button.

Figure 5-1 Keypad detail

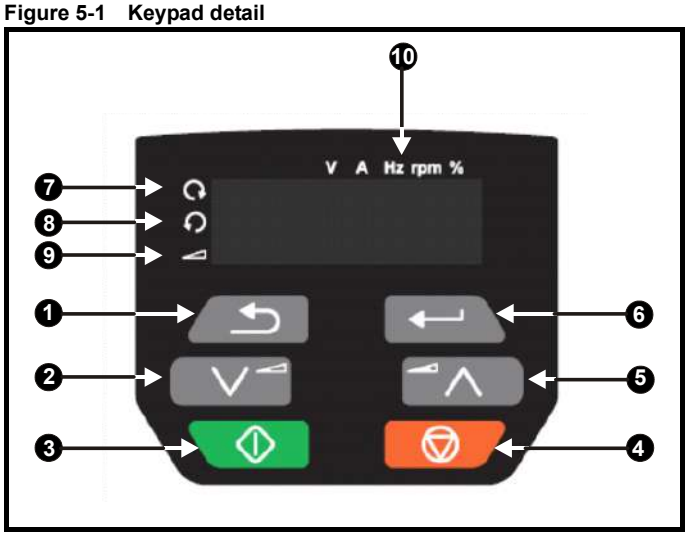

1. Escape button
2. Down button
3. Start button (green)
4. Stop / Reset button (red)
5. Up button
6. Enter button
7. Run forward indicator
8. Run reverse indicator
9. Keypad reference indicator
10. Unit indicators

NOTE

The red stop button is also used to reset the drive.

The parameter value is correctly displayed on the keypad display as shown in Table 5-1.

Table 5-1 Keypad display formats

Display formats	Value
Standard	100.99
Date	31.12.11 or 12.31.11
Time	12.34.56
Character	ABCDEF
Binary	5
IP Address	192.168 88.1*
MAC Address	01.02.03 04.05.06*
Version number	01.23.45

*Alternate display

5.2 Keypad operation

5.2.1 Control buttons

The keypad consists of:

- Up and down button - Used to navigate the parameter structure and change parameter values.
- Enter button - Used to change between parameter edit and view mode, as well as entering data. This button can also be used to select between slot menu and parameter display.
- Escape button - Used to exit from parameter edit or view mode. In parameter edit mode, if parameter values are edited and the escape button pressed, the parameter value will be restored to the value it had on entry to edit mode.
- Start button - Used to provide a 'Run' command if keypad mode is selected.
- Stop / Reset button - Used to reset the drive. In keypad mode can be used for 'Stop'.

Figure 5-2 Display modes

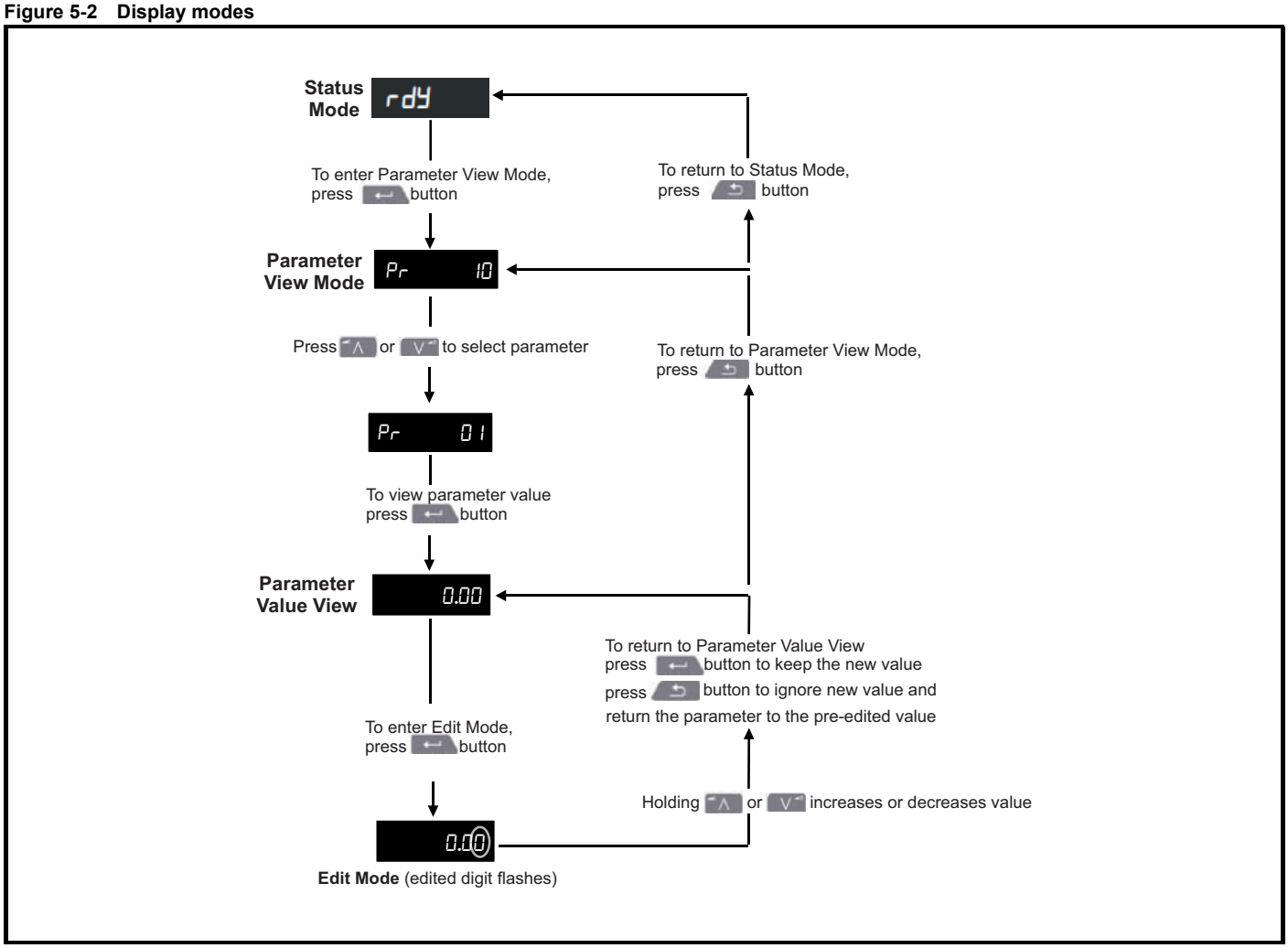

NOTE

The up and down buttons can only be used to move between menus if Pr **10** has been set to show 'ALL'. Refer to section 5.9 *Parameter access level and security* on page 29.

Figure 5-3 Mode examples

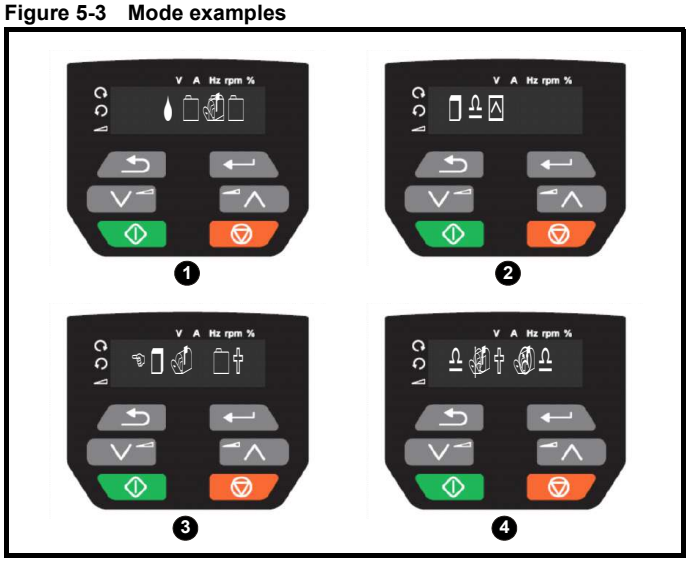

1 Parameter view mode: Read write or Read only

2 Status mode: Drive OK status

If the drive is ok and the parameters are not being edited or viewed, the display will show one of the following:

inh', 'rdy' or status mode parameter value.

3 Status mode: Trip status

When the drive is in trip condition, the display will indicate that the drive has tripped and the display will show the trip code. For further information regarding trip codes, refer to section 12.4 *Trips, Sub-trip numbers* on page 149.

4 Status mode: Alarm status

During an 'alarm' condition the display flashes between the drive status parameter value and the alarm.

WARNING

Do not change parameter values without careful consideration; incorrect values may cause damage or a safety hazard.

NOTE

When changing the values of parameters, make a note of the new values in case they need to be entered again.

NOTE

New parameter values must be saved to ensure that the new values apply after the drive has been power cycled. Refer to section 5.7 *Saving parameters* on page 28.

5.3 Menu structure

The drive parameter structure consists of menus and parameters.

The drive initially powers up so that only Menu 0 can be viewed. The up and down arrow buttons are used to navigate between parameters and once Pr **10** has been set to 'All' the up and down buttons are used to navigate between menus.

For further information refer to section 5.9 *Parameter access level and security* on page 29.

The menus and parameters rollover in both directions i.e. if the last parameter is displayed, a further press will cause the display to rollover and show the first parameter.

When changing between menus, the drive remembers which parameter was last viewed in a particular menu and thus displays that parameter.

5.4 Menu 0

Menu 0 is used to bring together various commonly used parameters for basic easy set up of the drive. The parameters displayed in Menu 0 can be configured in Menu 22.

Appropriate parameters are copied from the advanced menus into Menu 0 and thus exist in both locations.

For further information, refer to Chapter 6 *Basic parameters* on page 31.

Figure 5-4 Menu 0 copying

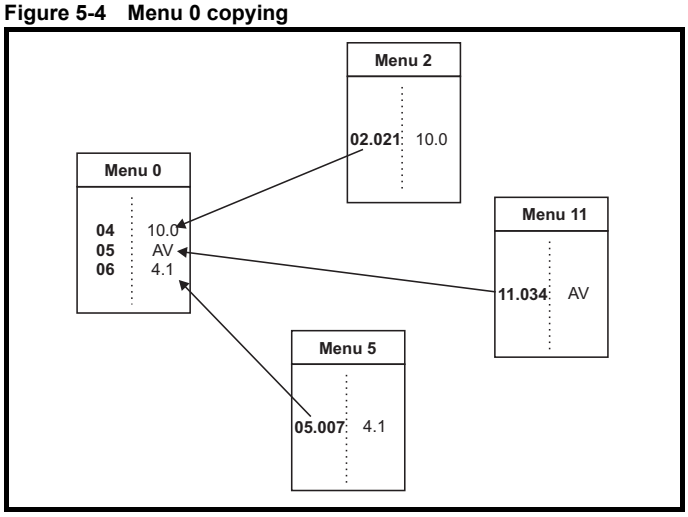

5.5 Advanced menus

The advanced menus consist of groups or parameters appropriate to a specific function or feature of the drive. Menus 0 to 24 can be viewed on the Keypad.

The option module menu (1.mm.ppp) is only displayed if the option module is installed. Where 1 signifies the option module slot number and the mm.ppp signifies the menu and parameter number of the option module's internal menus and parameters.

Table 5-2 Advanced menu descriptions

Menu	Description
0	Commonly used basic set up parameters for quick / easy programming
1	Frequency reference
2	Ramps
3	Frequency control
4	Torque and current control
5	Motor control
6	Sequencer and clock
7	Analog I/O
8	Digital I/O
9	Programmable logic, motorized pot, binary sum, timers
10	Status and trips
11	Drive set-up and identification, serial communications
12	Threshold detectors and variable selectors
14	User PID controller
15	Option module slot 1 set-up menu
18	General option module application menu 1
20	General option module application menu 2
21	Second motor parameters
22	Menu 0 set-up
24	Option module slot 1 application menu
Slot 1	Slot 1 option menus*

* Only displayed when the option module is installed.

5.5.1 Display messages

The following tables indicate the various possible mnemonics which can be displayed by the drive and their meaning.

Table 5-3 Status indications

String	Description	Drive output stage
inh	The drive is inhibited and cannot be run. The Safe Torque Off signal is not applied to Safe Torque Off terminals or Pr **06.015** is set to 0. The other conditions that can prevent the drive from enabling are shown as bits in *Enable Conditions* (06.010)	Disabled
rdy	The drive is ready to run. The drive enable is active, but the drive inverter is not active because the final drive run is not active	Disabled
Stop	The drive is stopped / holding zero speed.	Enabled
S.Loss	Supply loss condition has been detected	Enabled
dc inj	The drive is applying dc injection braking	Enabled
Er	The drive has tripped and no longer controlling the motor. The trip code appears on the display.	Disabled
UV	The drive is in the under voltage state either in low voltage or high voltage mode.	Disabled
HEAt	The motor pre-heat function is active	Enabled

5.5.2 Alarm indications

An alarm is an indication given on the display by alternating the alarm string with the drive status string on the display. Alarms strings are not displayed when a parameter is being edited.

Table 5-4 Alarm indications

Alarm string	Description
br.res	Brake resistor overload. *Braking Resistor Thermal Accumulator* (10.039) in the drive has reached 75.0 % of the value at which the drive will trip.
OV.Ld	*Motor Protection Accumulator* (04.019) in the drive has reached 75.0 % of the value at which the drive will trip and the load on the drive is >100 %.
d.OV.Ld	Drive over temperature. *Percentage Of Drive Thermal Trip Level* (07.036) in the drive is greater than 90 %.
tuning	The autotune procedure has been initialized and an autotune in progress.
LS	Limit switch active. Indicates that a limit switch is active and that is causing the motor to be stopped.
Opt.AI	Option slot alarm.
Lo.AC	Low voltage mode. See *Low AC Alarm* (10.107).
I.AC.Lt	Current limit active. See *Current Limit Active* (10.009).
24.LoSt	24V Backup not present. See *24V Alarm Loss Enable* (11.098)

5.6 Changing the operating mode

Procedure

Use the following procedure only if a different operating mode is required:

1. Ensure the drive is not enabled, i.e. drive is in inhibit or under voltage state.
2. Change the setting of Pr **79** as follows:

Pr 79 setting		Operating mode
OPEnLP	1	Open-loop
rFC-A	2	RFC-A

The figures in the second column apply when serial communications are used.

NOTE

When the operating mode is changed, a parameter save is carried out.

3. Either:

- Press the red reset button
- Carry out a drive reset through serial communications by setting Pr **10.038** to 100.

5.7 Saving parameters

When changing a parameter in Menu 0, the new value is saved when pressing the Enter button to return to parameter view mode from parameter edit mode.

If parameters have been changed in the advanced menus, then the change will not be saved automatically. A save function must be carried out.

Procedure

1. Select 'Save' in Pr **00** or Pr **mm.000** (alternatively enter a value of 1001 in Pr **00** or Pr **mm.000**)
2. Either:

- Press the red reset button
- Carry out a drive reset through serial communications by setting Pr **10.038** to 100

5.8 Restoring parameter defaults

Restoring parameter defaults by this method saves the default values in the drives memory. *User security status* (Pr **10**) and *User security code* (Pr **25**) are not affected by this procedure).

Procedure

1. Ensure the drive is not enabled, i.e. drive is in inhibit or under voltage state.
2. Select 'Def.50' or 'Def.60' in Pr **00** or Pr **mm.000**. (alternatively, enter 1233 (50 Hz settings) or 1244 (60 Hz settings) in Pr **00** or Pr **mm.000**).
3. Either:

- Press the red reset button
- Carry out a drive reset through serial communications by setting Pr **10.038** to 100

5.9 Parameter access level and security

The parameter access level determines whether the user has access to Menu 0 only or to all the advanced menus (Menus 1 to 24) in addition to Menu 0.

The User Security determines whether the access to the user is read only or read write.

Both the User Security and Parameter Access Level can operate independently of each other as shown in Table 5-5.

Table 5-5 Parameter access level and security

User security status (Pr 10)	Access level	Menu 0 status	Advanced menu status
0	LEVEL.1	RW	Not visible
1	LEVEL.2	RW	Not visible
2	ALL	RW	RW
3	StAtUS	RW	Not visible
4	no.Acc	RW	Not visible

The default settings of the drive are Parameter Access Level: LEVEL.1 and user Security Open i.e. read / write access to Menu 0 with the advanced menus not visible.

5.9.1 User Security Level / Access Level

The drive provides a number of different levels of security that can be set by the user via *User Security Status* (Pr **10**); these are shown in the table below.

User Security Status (Pr 10)	Description
LEVEL.1 (0)	Access to first 10 parameters in Menu 0 only.
LEVEL.2 (1)	Access to all parameters in Menu 0.
ALL (2)	Access to all menus.
StAtUS (3)	The keypad remains in status mode and only first 10 parameters in Menu 0 can be viewed or edited.
no.Acc (4)	The keypad remains in status mode and only first 10 parameters in Menu 0 can be viewed or edited. Drive parameters cannot be accessed via a comms interface.

5.9.2 Changing the User Security Level /Access Level

The security level is determined by the setting of Pr **10** or Pr **11.044**. The Security Level can be changed through the keypad even if the User Security Code has been set.

5.9.3 User Security Code

The User Security Code, when set, prevents write access to any of the parameters in any menu.

Setting User Security Code

Enter a value between 1 and 9999 in Pr **25** and press the button; the security code has now been set to this value. In order to activate the security, the Security level must be set to desired level in Pr **10**. When the drive is reset, the security code will have been activated and the drive returns to LEVEL.1. The value of Pr **25** will return to 0 in order to hide the security code.

Unlocking User Security Code

Select a parameter that need to be edited and press the button, the display will now show ‘Co’. Use the arrow buttons to set the security code and press the button. With the correct security code entered, the display will revert to the parameter selected in edit mode.

If an incorrect security code is entered, the following message ‘Co.Err’ is displayed, and the display will revert to parameter view mode.

Disabling User Security

Unlock the previously set security code as detailed above. Set Pr **25** to 0 and press the button. The User Security has now been disabled, and will not have to be unlocked each time the drive is powered up to allow read / write access to the parameters.

5.10 Displaying parameters with non-default values only

By selecting 'diff.d' in Pr **00** (Alternatively, enter 12000 in Pr **00**), the only parameters that will be visible to the user will be those containing a non-default value. This function does not require a drive reset to become active. In order to deactivate this function, return to Pr **00** and select 'none' (alternatively enter a value of 0). Please note that this function can be affected by the access level enabled, refer to section 5.9 *Parameter access level and security* on page 29 for further information regarding access level.

5.11 Displaying destination parameters only

By selecting 'dest' in Pr **00** (Alternatively enter 12001 in Pr **00**), the only parameters that will be visible to the user will be destination parameters. This function does not require a drive reset to become active. In order to deactivate this function, return to Pr **00** and select 'none' (alternatively enter a value of 0).

Please note that this function can be affected by the access level enabled, refer to section 5.9 *Parameter access level and security* on page 29 for further information regarding access level.

5.12 Communications

Installing an AI-485 Adaptor provides the drive with a 2 wire EIA 485 serial communications interface. This enables the drive set-up, operation and monitoring to be carried out with a PC or controller as required.

5.12.1 EIA 485 Serial communications

Communication is via the RJ45 connector or screw terminals (parallel connection). The drive only supports Modbus RTU protocol.

The communications port applies a 1.25 unit load to the communications network.

USB to EIA485 Communications

An external USB hardware interface such as a PC cannot be used directly with the 2-wire EIA485 interface of the drive. Therefore a suitable converter is required.

A suitable USB to EIA485 isolated converter is available from Control Techniques as follows:

- CT USB Comms cable (CT Part No. 4500-0096)

When using the above converter or any other suitable converter with the drive, it is recommended that no terminating resistors be connected on the network. It may be necessary to 'link out' the terminating resistor within the converter depending on which type is used. The information on how to link out the terminating resistor will normally be contained in the user information supplied with the converter.

Serial communications set-up parameters

The following parameters need to be set according to the system requirements.

Serial communications set-up parameters		
Serial Mode (11.024)	8 2 NP (0), 8 1 NP (1), 8 1 EP (2), 8 1 OP (3), 8 2 NP M (4), 8 1 NP M (5), 8 1 EP M (6), 8 1 OP M (7), 7 1 EP (8), 7 1 OP (9), 7 1 EP M (10), 7 1 OP M (11)	The drive only supports the Modbus RTU protocol and is always a slave. This parameter defines the supported data formats used by the EIA 485 comms port (if installed) on the drive. This parameter can be changed via the drive keypad, via a option module or via the comms interface itself.
Serial Baud Rate (Pr **43**)	600 (1), 1200 (2), 2400 (3), 4800 (4), 9600 (5), 19200 (6), 38400 (7), 57600(8), 76800(9), 115200 (10)	This parameter can be changed via the drive keypad, via a option module or via the comms interface itself. If it is changed via the comms interface, the response to the command uses the original baud rate. The master should wait at least 20 ms before sending a new message using the new baud rate.
Serial Address (Pr **44**)	1 to 247	This parameter defines the serial address and an addresses between 1 and 247 are permitted.
Reset Serial Communications (Pr **45**)	Off (0) or On (1)	When the above parameters are modified the changes do not have an immediate effect on the serial communication system. The new values are used after the next power up or if Reset Serial Communications is set to 1.

6 Basic parameters

Menu 0 is used to bring together various commonly used parameters for basic easy set up of the drive. All the parameters in Menu 0 appear in other menus in the drive (denoted by {…}). Menu 22 can be used to configure the parameters in Menu 0.

6.1 Parameter ranges and Variable minimum/maximums:

Some parameters in the drive have a variable range with a variable minimum and a variable maximum value which is dependent on one of the following:

- The settings of other parameters
- The drive rating
- The drive mode
- Combination of any of the above

For more information please see section 11.1 *Parameter ranges and Variable minimum/maximums:* on page 87.

6.2 Menu 0: Basic parameters

Parameter			Range (⇕)		Default (⇨)		Type					
			OL	RFC-A	OL	RFC-A						
01	Minimum Speed	**{01.007}**	0.00 to Pr **02** Hz		0.00 Hz		RW	Num				US
02	Maximum Speed	**{01.006}**	0.00 to 550.00 Hz		50Hz default: 50.00 Hz 60Hz default: 60.00 Hz		RW	Num				US
03	Acceleration Rate 1	**{02.011}**	0.0 to 32000.0 s/Maximum Frequency		5.0 s/Maximum Frequency		RW	Num				US
04	Deceleration Rate 1	**{02.021}**	0.0 to 32000.0 s/Maximum Frequency		10.0 s/Maximum Frequency		RW	Num				US
05	Drive Configuration	**{11.034}**	AV (0), AI (1), AV.Pr (2), AI.Pr (3), PrESEt (4), PAd (5), PAd.rEF (6), E.Pot (7), torquE (8), Pid (9)		AV (0)		RW	Txt			PT	US
06	Motor Rated Current	**{05.007}**	0.00 to Drive Rating A		Maximum Heavy Duty Rating A		RW	Num		RA		US
07	Motor Rated Speed*	**{05.008}**	0.0 to 33000.0 rpm		50Hz default: 1500.0 rpm 60Hz default: 1800.0 rpm	50Hz default: 1450.0 rpm 60Hz default: 1750.0 rpm	RW	Num				US
08	Motor Rated Voltage	**{05.009}**	0 to 765 V		110V drive: 230 V 200V drive: 230 V 400V drive 50 Hz: 400 V 400V drive 60 Hz: 460 V 575V drive: 575 V		RW	Num		RA		US
09	Motor Rated Power Factor**	**{05.010}**	0.00 to 1.00		0.85		RW	Num		RA		US
10	User Security Status	**{11.044}**	LEVEL.1 (0), LEVEL.2 (1), ALL (2), StAtUS (3), no.Acc (4)		LEVEL.1 (0)		RW	Num	ND		PT	
11	Start/Stop Logic Select	**{06.004}**	0 to 6		5		RW	Num				US
15	Jog Reference	**{01.005}**	0.00 to 300.00 Hz		1.50 Hz		RW	Num				US
16	Analog Input 1 Mode	**{07.007}**	4-20.S (-6), 20-4.S (-5), 4-20.L (-4), 20-4.L (-3), 4-20.H (-2), 20-4.H (-1), 0-20 (0), 20-0 (1), 4-20.tr (2), 20-4.tr (3), 4-20 (4), 20-4 (5), Volt (6)		Volt (6)		RW	Txt				US
17	Bipolar Reference Enable	**{01.010}**	Off (0) or On (1)		Off (0)		RW	Bit				US
18	Preset Reference 1	**{01.021}**	0.00 to Pr **02** Hz		0.00 Hz		RW	Num				US
19	Preset Reference 2	**{01.022}**	0.00 to Pr **02** Hz		0.00 Hz		RW	Num				US
20	Preset Reference 3	**{01.023}**	0.00 to Pr **02** Hz		0.00 Hz		RW	Num				US
21	Preset Reference 4	**{01.024}**	0.00 to Pr **02** Hz		0.00 Hz		RW	Num				US
22	Status Mode Parameter 2	**{11.019}**	0.000 to 30.999		4.020		RW	Num			PT	US
23	Status Mode Parameter 1	**{11.018}**	0.000 to 30.999		2.001		RW	Num			PT	US
24	Customer Defined Scaling	**{11.021}**	0.000 to 10.000		1.000		RW	Num				US
25	User Security Code	**{11.030}**	0 to 9999		0		RW	Num	ND		PT	US
27	Power-up Keypad Control Mode Reference	**{01.051}**	Reset (0), Last (1), Preset (2)		Reset (0)		RW	Txt				US
28	Ramp Mode Select	**{02.004}**	Fast (0), Std (1), Std.bst (2), Fst.bst (3)		Std (1)		RW	Txt				US
29	Ramp Enable	**{02.002}**		Off (0) or On (1)		On (1)	RW	Bit				US
30	Parameter Cloning	**{11.042}**	NonE (0), rEAd (1), Prog (2), Auto (3), boot (4)		NonE (0)		RW	Txt		NC		US
31	Stop Mode	**{06.001}**	Coast (0), rp (1), rp.dc I (2), dc I (3), td.dc I (4), dis (5)	Coast (0), rp (1), rp.dc I (2), dc I (3), td.dc I (4), dis (5), No.rp (6)	rp (1)		RW	Txt				US
32	Dynamic V to F Select	**{05.013}**	0 to 1		0		RW	Num				US
	Flux Optimisation Select	**{05.013}**		0 to 1		0	RW	Num				US
33	Catch A Spinning Motor	**{06.009}**	dis (0), Enable (1), Fr.Only (2), Rv.Only (3)		dis (0)		RW	Txt				US
34	Digital Input 5 Select	**{08.035}**	Input (0), th.Sct (1), th (2), th.Notr (3), Fr (4)		Input (0)		RW	Txt				US
35	Digital Output 1 Control	**{08.091}**	0 to 21		0		RW	Num				US
36	Analog Output 1 Control	**{07.055}**	0 to 15		0		RW	Txt				US
37	Maximum Switching Frequency	**{05.018}**	0.667 (0), 1 (1), 2 (2), 3 (3), 4 (4), 6 (5), 8 (6), 12 (7), 16 (8) kHz	2 (2), 3 (3), 4 (4), 6 (5), 8 (6), 12 (7), 16 (8) kHz	3 (3) kHz		RW	Txt				US
38	Autotune	**{05.012}**	0 to 2	0 to 3	0		RW	Num		NC		US
39	Motor Rated Frequency	**{05.006}**	0.0 to 550.00 Hz		50Hz: 50.00 Hz 60Hz: 60.00 Hz		RW	Num		RA		US
40	Number of Motor Poles***	**{05.011}**	Auto (0) to 32 (16)		Auto (0)		RW	Num				US

Parameter			Range (⇕)		Default (⇨)		Type					
			OL	RFC-A	OL	RFC-A						
41	Control Mode	**{05.014}**	Ur.S (0), Ur (1), Fd (2), Ur.Auto (3), Ur.I (4), SrE (5), Fd.tAP (6)		Fd (2)		RW	Txt				US
42	Low Frequency Voltage Boost	**{05.015}**	0.0 to 25.0 %		3.0 %		RW	Num				US
43	Serial Baud Rate	**{11.025}**	600 (1), 1200 (2), 2400 (3), 4800 (4), 9600 (5), 19200 (6), 38400 (7), 57600 (8), 76800 (9), 115200 (10)		19200 (6)		RW	Txt				US
44	Serial Address	**{11.023}**	1 to 247		1		RW	Num				US
45	Reset Serial Communications	**{11.020}**	Off (0) or On (1)		Off (0)		RW		ND	NC		
46	BC Upper Current Threshold	**{12.042}**	0 to 200 %		50 %		RW	Num				US
47	BC Lower Current Threshold	**{12.043}**	0 to 200 %		10 %		RW					US
48	BC Brake Release Frequency	**{12.044}**	0.00 to 20.00 Hz		1.00 Hz		RW	Num				US
49	BC Brake Apply Frequency	**{12.045}**	0.00 to 20.00 Hz		2.00 Hz		RW	Num				US
50	BC Brake Delay	**{12.046}**	0.0 to 25.0 s		1.0 s		RW	Num				US
51	BC Post-brake Release Delay	**{12.047}**	0.0 to 25.0 s		1.0 s		RW	Num				US
53	BC Initial Direction	**{12.050}**	Ref (0), For (1), Rev (2)		Ref (0)		RW	Txt				US
54	BC Brake Apply Through Zero Threshold	**{12.051}**	0.00 to 25.00 Hz		1.00 Hz		RW	Num				US
55	BC Enable	**{12.041}**	dis (0), Relay (1), dig IO (2), User (3)		dis (0)		RW	Txt				US
56	Trip 0	**{10.020}**	0 to 255				RO	Txt	ND	NC	PT	PS
57	Trip 1	**{10.021}**	0 to 255				RO	Txt	ND	NC	PT	PS
58	Trip 2	**{10.022}**	0 to 255				RO	Txt	ND	NC	PT	PS
59	OUP Enable	**{11.047}**	Stop (0) or Run (1)		Run (1)		RW	Txt				US
60	OUP Status	**{11.048}**	-2147483648 to 2147483647				RO	Num	ND	NC	PT	
64	Ramp Rate Units	**{02.039}**	0: (s/100Hz), 1: (s/Maximum Frequency), 2: (s/1000Hz)		1 (s/Maximum Frequency)		RW	Num				US
65	Frequency Controller Proportional Gain Kp1	**{03.010}**		0.000 to 200.000 s/rad		0.100 s/rad	RW	Num				US
66	Frequency Controller Integral Gain Ki1	**{03.011}**		0.00 to 655.35 s²/rad		0.10 s²/rad	RW	Num				US
67	Sensorless Mode Filter	**{03.079}**		4 (0), 5 (1), 6 (2), 8 (3), 12 (4), 20 (5) ms		4 (0) ms	RW	Txt				US
69	Spin Start Boost	**{05.040}**	0.0 to 10.0		1.0		RW	Num				US
70	PID1 Output	**{14.001}**	± 100.00 %				RO	Num	ND	NC	PT	
71	PID1 Proportional Gain	**{14.010}**	0.000 to 4.000		1.000		RW	Num				US
72	PID1 Integral Gain	**{14.011}**	0.000 to 4.000		0.500		RW	Num				US
73	PID1 Feedback Invert	**{14.006}**	Off (0) or On (1)		Off (0)		RW	Bit				US
74	PID1 Output Upper Limit	**{14.013}**	0.00 to 100.00 %		100.00 %		RW	Num				US
75	PID1 Output Lower Limit	**{14.014}**	± 100.00 %		-100.00 %		RW	Num				US
76	Action on Trip Detection	**{10.037}**	0 to 31		0		RW	Num				US
77	Maximum Heavy Duty Current Rating	**{11.032}**	0.00 to Drive HD Current Rating A				RO	Num	ND	NC	PT	
78	Software Version	**{11.029}**	0 to 99.99.99				RO	Num	ND	NC	PT	
79	User Drive Mode	**{11.031}**	OPEn.LP (1), RFC-A (2)		OPEn.LP (1)	RFC-A (2)	RW	Txt	ND	NC	PT	US
81	Reference Selected	**{01.001}**	-Pr **02** to Pr **02** or Pr **01** to Pr **02** Hz				RO	Num	ND	NC	PT	
82	Pre-ramp Reference	**{01.003}**	-Pr **02** to Pr **02** or Pr **01** to Pr **02** Hz				RO	Num	ND	NC	PT	
83	Final Demand Reference	**{03.001}**	-Pr **02** to Pr **02** or Pr **01** to Pr **02** Hz				RO	Num	ND	NC	PT	FI
84	D.C. Bus Voltage	**{05.005}**	0 to 1190 V				RO	Num	ND	NC	PT	FI
85	Output Frequency	**{05.001}**	± 550.00 Hz				RO	Num	ND	NC	PT	FI
86	Output Voltage	**{05.002}**	0 to 930 V				RO	Num	ND	NC	PT	FI
87	Motor Rpm	**{05.004}**	± 33000.0 rpm				RO	Num	ND	NC	PT	FI
88	Current Magnitude	**{04.001}**	0 to Drive Maximum Current A				RO	Num	ND	NC	PT	FI
89	Torque Producing Current	**{04.002}**	± Drive Maximum Current A				RO	Num	ND	NC	PT	FI
90	Digital I/O Read Word	**{08.020}**	0 to 2047				RO	Bin	ND	NC	PT	
91	Reference On	**{01.011}**	Off (0) or On (1)				RO	Bit	ND	NC	PT	
92	Reverse Select	**{01.012}**	Off (0) or On (1)				RO	Bit	ND	NC	PT	
93	Jog Select	**{01.013}**	Off (0) or On (1)				RO	Bit	ND	NC	PT	
94	Analog Input 1	**{07.001}**	± 100.00 %				RO	Num	ND	NC	PT	FI
95	Analog Input 2	**{07.002}**	± 100.00 %				RO	Num	ND	NC	PT	FI

* Setting Pr **07** to 0.0 will disable slip compensation.

** Following a rotating autotune Pr **09** {05.010} is continuously written by the drive, calculated from the value of *Stator Inductance* (Pr **05.025**). To manually enter a value into Pr **09** {05.010}, Pr **05.025** will need to be set to 0. Refer to the description of Pr **05.010** in the *Parameter Reference Guide* for further details.

*** If this parameter is read via serial communications, it will show pole pairs.

RW	Read / Write	RO	Read only	Num	Number parameter	Bit	Bit parameter	Txt	Text string	Bin	Binary parameter	FI	Filtered
ND	No default value	NC	Not copied	PT	Protected parameter	RA	Rating dependent	US	User save	PS	Power-down save	DE	Destination
IP	IP address	Mac	Mac address	Date	Date parameter	Time	Time parameter						

Figure 6-1 Menu 0 logic diagram

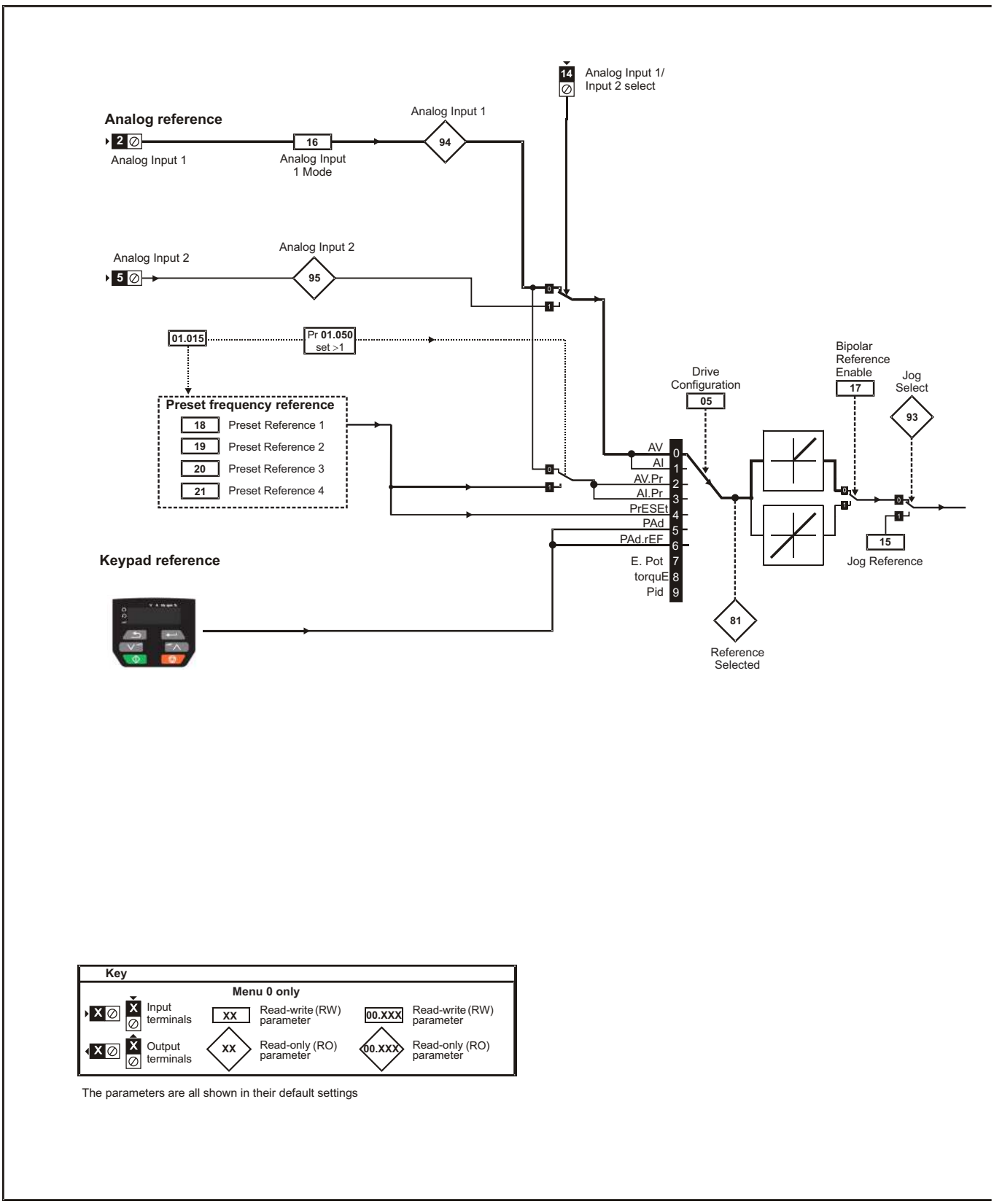

The parameters are all shown in their default settings

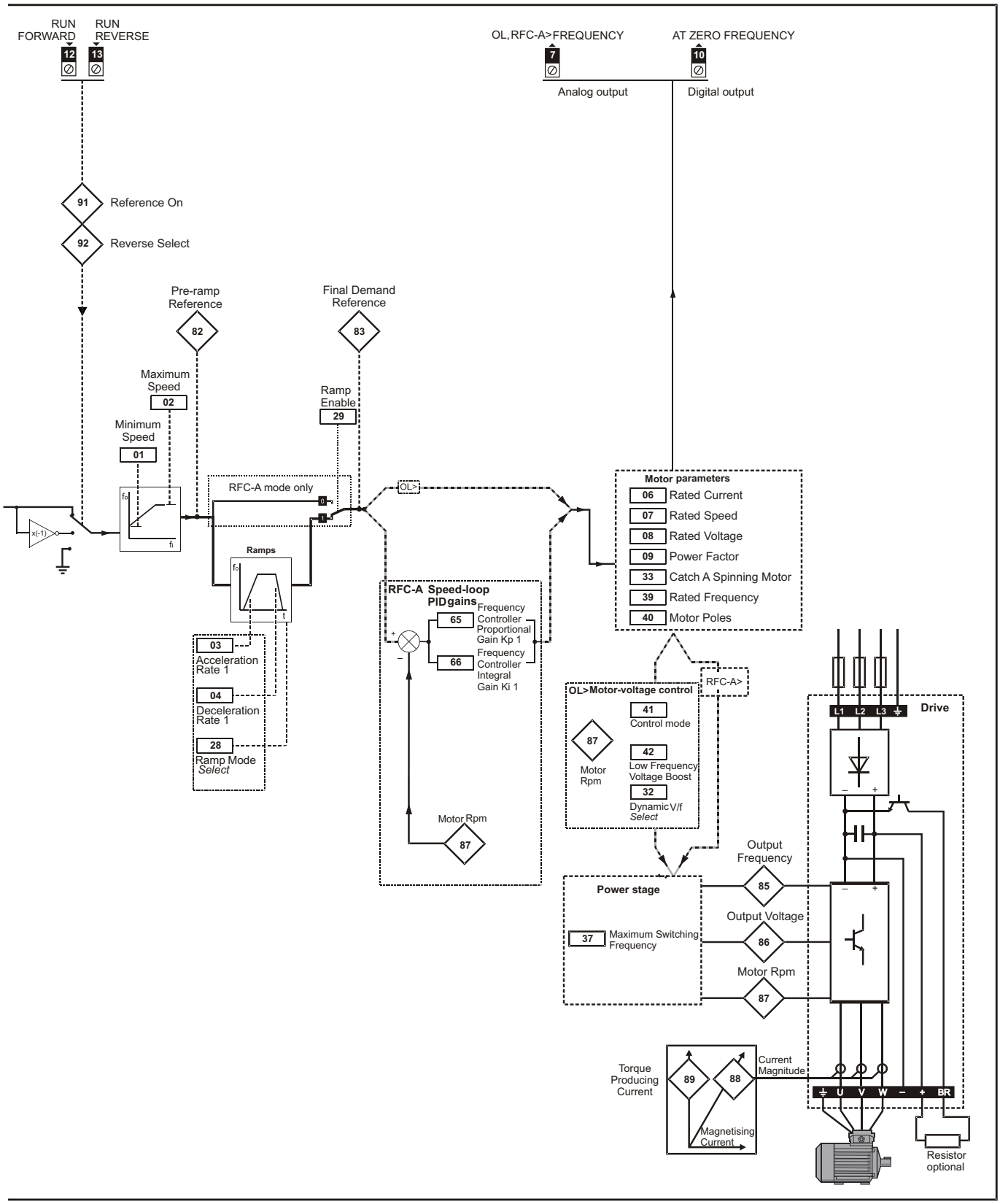
RUN FORWARD
RUN REVERSE
12
13
OL,RFC-A>FREQUENCY
AT ZERO FREQUENCY
7
10
Analog output
Digital output
91 Reference On
92 Reverse Select
Pre-ramp Reference
82
Final Demand Reference
83
Maximum Speed
02
Minimum Speed
01
Ramp Enable
29
RFC-A mode only
OL>
Ramps
Motor parameters
06 Rated Current
07 Rated Speed
08 Rated Voltage
09 Power Factor
33 Catch A Spinning Motor
39 Rated Frequency
40 Motor Poles
RFC-A Speed-loop PIDgains
65 Frequency Controller Proportional Gain Kp 1
66 Frequency Controller Integral Gain Ki 1
Motor Rpm
87
03 Acceleration Rate 1
04 Deceleration Rate 1
28 Ramp Mode Select
OL>Motor-voltage control
41 Control mode
42 Low Frequency Voltage Boost
32 Dynamic V/f Select
RFC-A>
Power stage
37 Maximum Switching Frequency
Output Frequency
85
Output Voltage
86
Motor Rpm
87
Drive
L1 L2 L3
U V W BR
Torque Producing Current
89
88
Current Magnitude
Magnetising Current
Resistor optional

6.3 Parameter descriptions

6.3.1 Pr 00

Pr **00** is available in all menus, commonly used functions are provided as text strings in Pr **00** shown in Table 6-1. The functions in Table 6-1 can also be selected by entering the appropriate numeric values (as shown in Table 6-2) in Pr **00**. For example, enter 4001 in Pr **00** to store drive parameters on an NV media card.

Table 6-1 Commonly used functions in Pr 00

Value	Equivalent value	String	Action
0	0	**None**	No action
1001	1	**SAVE**	Save drive parameters to non-volatile memory
6001	2	**LOAd.1**	Load the data from file 1 on a non-volatile media card into the drive provided it is a parameter file
4001	3	**SAVE.1**	Store the drive parameters in file 1 on a non-volatile media card
6002	4	**LOAd.2**	Load the data from file 2 on a non-volatile media card into the drive provided it is a parameter file
4002	5	**SAVE.2**	Store the drive parameters in file 2 on a non-volatile media card
6003	6	**LOAd.3**	Load the data from file 3 on a non-volatile media card into the drive provided it is a parameter file
4003	7	**SAVE.3**	Store the drive parameters in file 3 on a non-volatile media card
12000	8	**diff.d**	Only display parameters that are different from their default value
12001	9	**dest**	Only display parameters that are used to set-up destinations
1233	10	**def.50**	Load 50 Hz defaults
1244	11	**def.60**	Load 60 Hz defaults
1070	12	**rst.opt**	Reset option module

Table 6-2 Functions in Pr 00

Value	Action
1000	Save parameters when *Under Voltage Active* (Pr **10.016**) is not active.
1001	Save parameters under all conditions
1070	Reset option module
1233	Load standard (50 Hz) defaults
1234	Load standard (50 Hz) defaults to all menus except option module menu 15
1244	Load US (60 Hz) defaults
1245	Load US (60 Hz) defaults to all menus except option module menu 15
1299	Reset {St.HF} trip.
2001*	Create a boot file on a non-volatile media card based on the present drive parameters including all Menu 20 parameters
4yyy*	NV media card: Transfer the drive parameters to parameter file yyy
5yyy	NV media card: Transfer the onboard user program to onboard user program file yyy
59999***	Delete onboard user program
6yyy*	NV media card: Load the drive parameters from parameter file yyy
7yyy*	NV media card: Erase file yyy
8yyy*	NV Media card: Compare the data in the drive with file yyy
9555*	NV media card: Clear the warning suppression flag
9666*	NV media card: Set the warning suppression flag
9777*	NV media card: Clear the read-only flag
9888*	NV media card: Set the read-only flag
12000**	Only display parameters that are different from their default value. This action does not require a drive reset.
12001**	Only display parameters that are used to set-up destinations (i.e. DE format bit is 1). This action does not require a drive reset.

* See Chapter 9 *NV Media Card* on page 77 for more information on these functions.

** These functions do not require a drive reset to become active.
All other functions require a drive reset to initiate the function. Equivalent values and strings are also provided in the table above.

*** Program cannot be deleted if the drive is active or if the user program is running.

Set Pr **01** at the required minimum output frequency of the drive for both directions of rotation. The drive speed reference is scaled between Pr **01** and Pr **02**. Pr **01** is a nominal value; slip compensation may cause the actual frequency to be higher. When the drive is jogging, Pr **01** has no effect.

02		Maximum Speed								
RW		Num							US	
OL / RFC-A	⇕	0.00 to 550.00 Hz				⇨	Def.50: 50.00 Hz Def.60: 60.00 Hz			

Set Pr **02** at the required maximum output frequency for both directions of rotation. The drive speed reference is scaled between Pr **01** and Pr **02**. Pr **02** is a nominal value; slip compensation may cause the actual frequency to be higher. The drive has additional over-speed protection.

03		Acceleration Rate 1								
RW		Num							US	
OL / RFC-A	⇕	0.0 to 32000.0 s/100 Hz				⇨	5.0 s/100 Hz			

Set Pr **03** at the required rate of acceleration. Note that larger values produce lower acceleration. The rate applies in both directions of rotation.

04		Deceleration Rate 1								
RW		Num							US	
OL / RFC-A	⇕	0.0 to 32000.0 s/100 Hz				⇨	10.0 s/100 Hz			

Set Pr **04** at the required rate of deceleration. Note that larger values produce lower deceleration. The rate applies in both directions of rotation.

05		Drive Configuration								
RW		Txt						PT	US	
OL / RFC-A	⇕	AV (0), AI (1), AV.Pr (2), AI.Pr (3), PrESEt (4), PAd (5), PAd.rEF (6), E.Pot (7), torquE (8), Pid (9)				⇨	AV (0)			

Table 6-3 Parameter changes when drive configuration is changed

Parameter number	Description	Drive Configuration									
		AV	**AI**	**AV.Pr**	**AI.Pr**	**PrESEt**	**PAd**	**PAd.rEF**	**E.Pot**	**torquE**	**Pid**
01.014	Reference select	0	0	1	1	3	4	6	3	0	1
06.004	Start/stop logic	5	5	5	5	5	5	5	5	5	5
07.007	Analog input 1 mode	6	4	6	4	6	6	6	6	4	4
07.010	Analog input 1 destination	01.036	01.036	01.036	01.036	01.036	01.036	01.036	01.036	01.036	0.000
07.011	Analog input 2 mode	6	6	7	7	7	6	6	7	6	6
07.014	Analog input 2 destination	01.037	01.037	01.046	01.046	01.046	01.037	01.037	09.027	04.008	0.000
07.051	Analog input 1 control	0	0	0	0	0	0	0	0	0	0
07.052	Analog input 2 control	0	0	0	0	0	0	0	0	0	0
08.022	Digital input 2 destination	0.000	0.000	0.000	0.000	0.000	0.000	0.000	0.000	0.000	0.000
08.025	Digital input 5 destination	01.041	01.041	01.045	01.045	01.045	01.041	01.041	09.026	04.011	14.008
08.085	DI 5 Control	0	0	0	0	0	0	0	0	0	0
09.025	Motorized pot destination	0.000	0.000	0.000	0.000	0.000	0.000	0.000	01.021	0.000	0.000
14.003	PID 1 reference source	0.000	0.000	0.000	0.000	0.000	0.000	0.000	0.000	0.000	07.002
14.004	PID 1 feedback source	0.000	0.000	0.000	0.000	0.000	0.000	0.000	0.000	0.000	07.001
14.016	PID 1 destination	0.000	0.000	0.000	0.000	0.000	0.000	0.000	0.000	0.000	01.036

The setting of Pr **05** automatically sets the drive configuration.

Value	Text	Description
0	AV	Analog input 1 (voltage) or Analog input 2 (voltage) selected by terminal (Local/Remote)
1	AI	Analog input 1 (current) or Analog input 2 (voltage) selected by terminal (Local/Remote)
2	AV.Pr	Analog input 1 (voltage) or 3 presets selected by terminal
3	AI.Pr	Analog input 1 (current) or 3 presets selected by terminal
4	PrESEt	Four presets selected by terminal
5	PAd	Keypad reference
6	PAd.rEF	Keypad reference with terminal control
7	E.Pot	Electronic Potentiometer
8	torquE	Torque mode, Analog input 1 (current frequency reference) or Analog input 2 (voltage torque reference) selected by terminal
9	Pid	PID mode, Analog input 1 (current feedback source) and Analog input 2 (voltage reference source)

Action will only occur if the drive is inactive and no User Actions are running. Otherwise, the parameter will return to its pre altered value on exit from edit mode. All parameters are saved if this parameter changes.

Figure 6-2 Pr 05 = AV

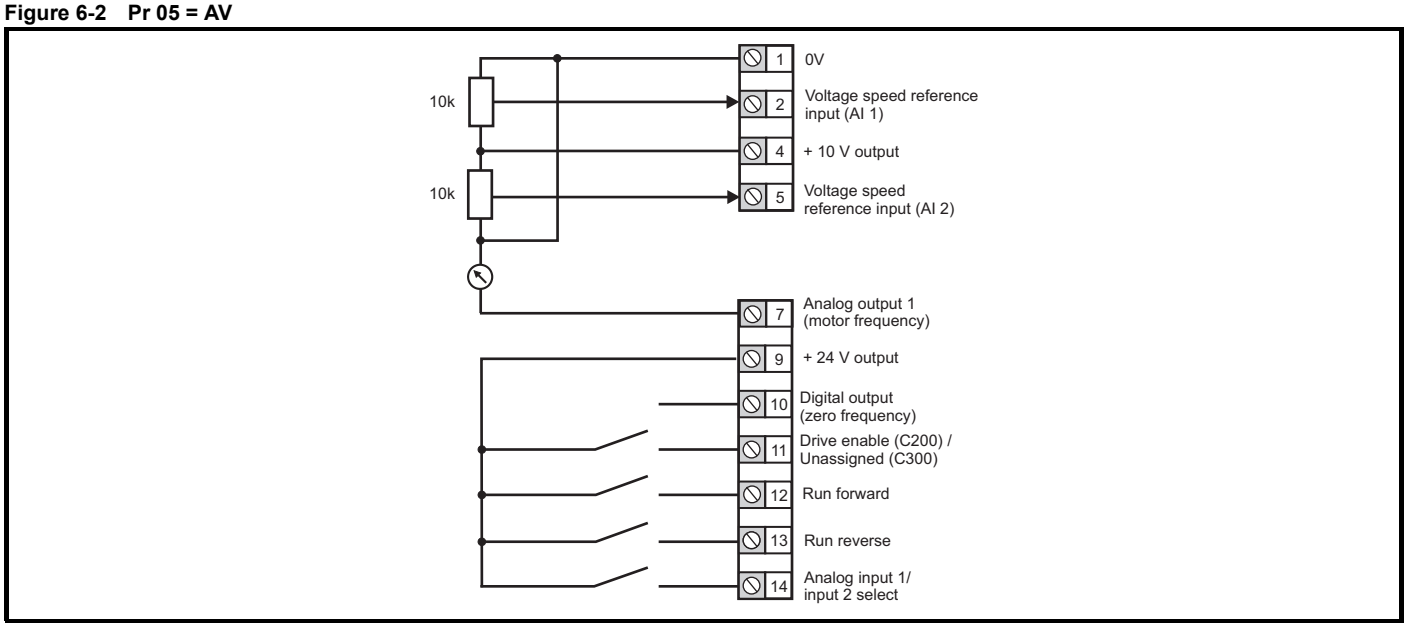

Figure 6-3 Pr 05 = AI

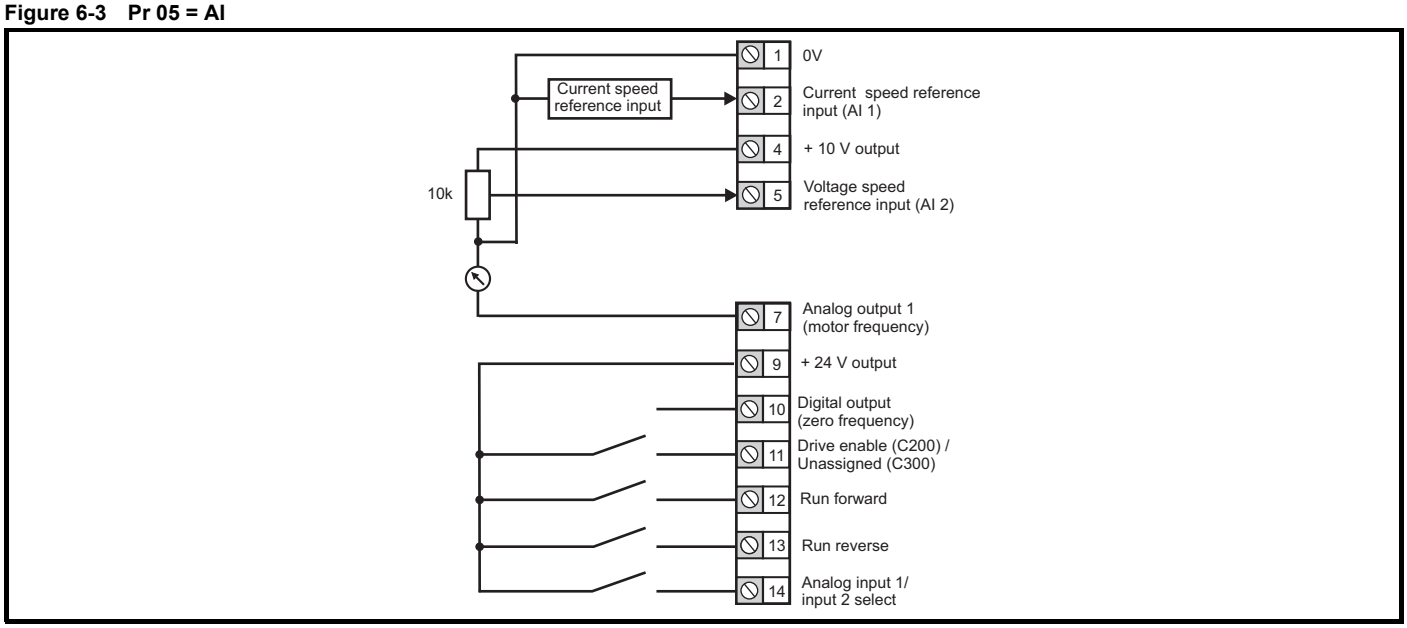

Figure 6-4 Pr 05 = AV.Pr

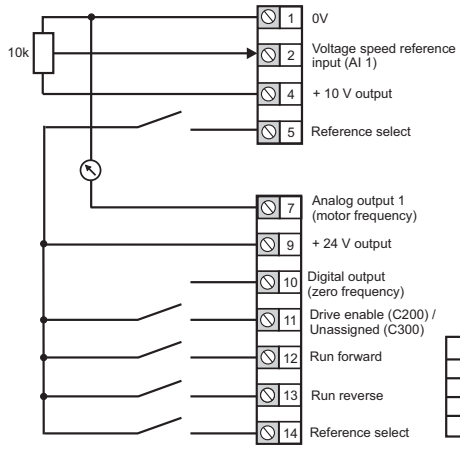

Terminal 5	Terminal 14	Reference selected
0	0	Analog reference 1*
0	1	Preset speed 2 *
1	0	Preset speed 3 *
1	1	Preset speed 4 *

* Refer to section 11.2 *Menu 1: Frequency reference* on page 94.

Figure 6-5 Pr 05 = AI.Pr

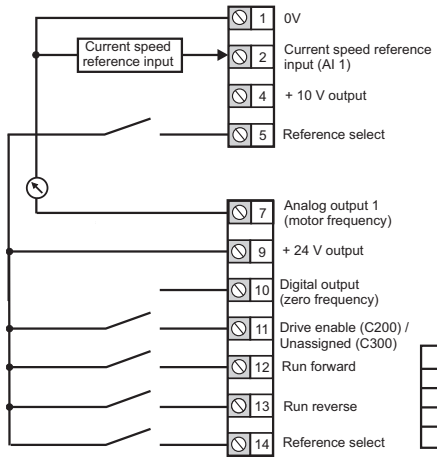

Terminal 5	Terminal 14	Reference selected
0	0	Analog reference 1*
0	1	Preset speed 2*
1	0	Preset speed 3*
1	1	Preset speed 4*

Figure 6-6 Pr 05 = PrESEt

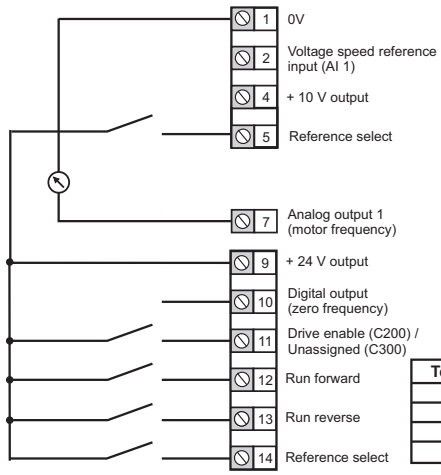

Terminal 5	Terminal 14	Reference selected
0	0	Preset speed 1*
0	1	Preset speed 2*
1	0	Preset speed 3*
1	1	Preset speed 4*

* Refer to section 11.2 *Menu 1: Frequency reference* on page 94.

Figure 6-7 Pr 05 = PAd

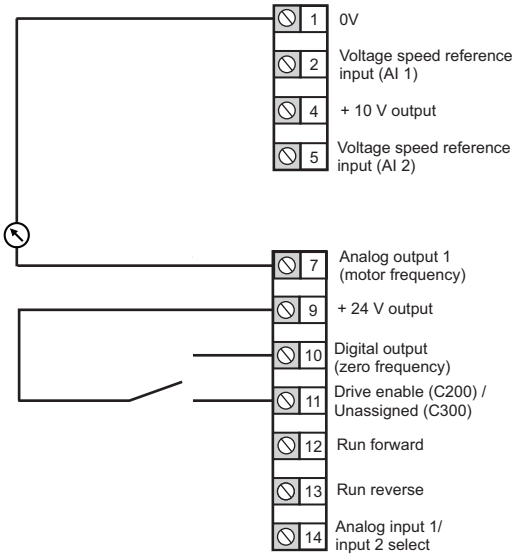

When Pr **05** is set to PAd, to run in reverse:

- Set Pr **17** to On

The Keypad reference can now be set to a negative frequency to run the motor in the reverse direction.

Figure 6-8 Pr 05 = PAd.rEF

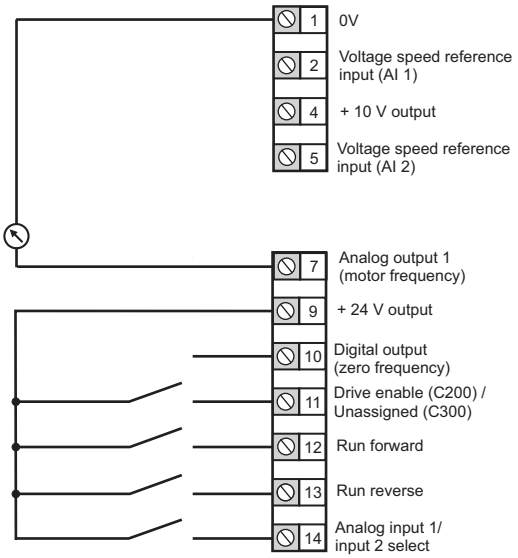

Figure 6-9 Pr 05 = E.Pot

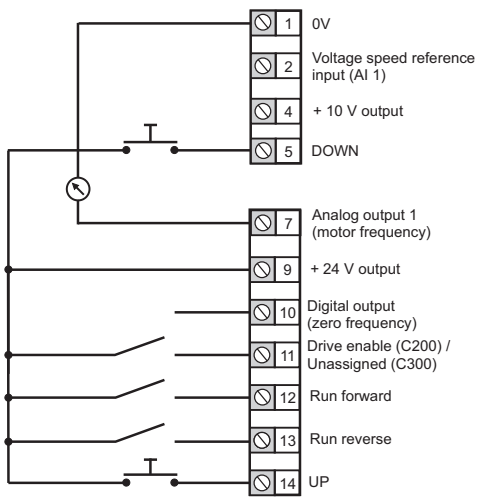

When Pr **05** is set to E.Pot, the following parameters may need to be adjusted:

- Pr **09.023**: Motorized pot up/down rate (s/100 %)
- Pr **09.022**: Motorized pot bipolar select (0 = unipolar, 1 = bipolar)
- Pr **09.021**: Motorized pot mode: 0 = zero at power-up, 1 = last value at power-up, 2 = zero at power-up and only change when drive is running, 3 = last value at power-up and only change when drive is running, 4 = zero at power-up and drive disabled, only change when drive is running.

Figure 6-10 Pr 05 = torquE

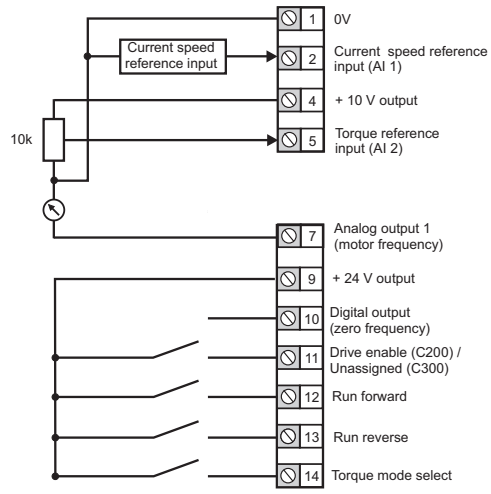

WARNING

When torque mode is selected and the drive is connected to an unloaded motor, the motor speed may increase rapidly to the maximum speed (Pr **02** +10 %).

Figure 6-11 Pr 05 = Pid

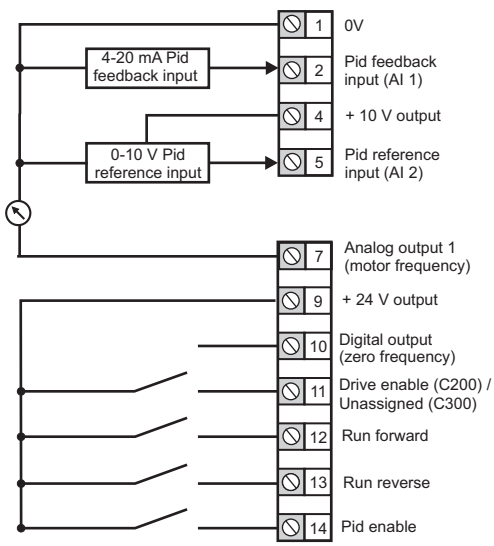

When Pr **05** is set to Pid, the following parameters may need to be adjusted:

- PID proportional gain*
- PID integral gain*
- PID feedback invert*
- PID output upper limit (%)*
- PID output lower limit (%)*

* Refer to section 11.14 *Menu 14: User PID controller* on page 138.

06		**Motor Rated Current**							
RW		Num						US	
OL / **RFC-A**	⇕	0.00 to Drive Rating A			⇨	Maximum Heavy Duty Rating A			

The rated current parameter must be set to the maximum continuous current of the motor (taken from the name plate). The motor rated current is used in the following:

- Current limits
- Motor thermal overload protection
- Vector mode voltage control
- Slip compensation
- Dynamic V/F control

07	Motor Rated Speed								
RW	Num							US	
OL	⇕	0.0 to 33000.0 rpm*			⇨	Def.50: 1500.0 rpm Def.60: 1800.0 rpm			
RFC-A						Def.50: 1450.0 rpm Def.60: 1750.0rpm			

Set to the rated speed of the motor (taken from the motor name plate). The motor rated speed is used to calculate the correct slip speed for the motor.

08	Motor Rated Voltage								
RW	Num					RA		US	
OL	⇕	0 to 240 V or 0 to 480 V			⇨	110 V drive: 230 V 200 V drive: 230 V 400 V drive 50 Hz: 400 V 400 V drive 60 Hz: 460 V 575 V drive: 575 V			
RFC-A									

The Rated Voltage (Pr **08**) and the Rated Frequency (Pr **39**) are used to define the voltage to frequency characteristic applied to the motor. The Rated Frequency (Pr **39**) is also used in conjunction with the Motor Rated Speed (Pr **07**) to calculate the rated slip for slip compensation.

09	Motor Rated Power Factor								
RW	Num					RA		US	
OL	⇕	0.00 to 1.00			⇨	0.85			
RFC-A									

Enter the motor rated power factor cos φ (taken from the motor name plate).

The drive can measure the motor rated power factor by performing a rotating autotune (see Autotune (Pr **38**).

10	User Security Status								
RW	Num				ND		PT	US	
OL	⇕	LEVEL.1 (0), LEVEL.2 (1), ALL (2), StAtUS (3), no.Acc (4)			⇨	LEVEL.1 (0)			
RFC-A									

This parameter controls access via the drive keypad as follows:

Value	Text	Function
0	LEVEL.1	Access to first 10 parameters in Menu 0 only.
1	LEVEL.2	Access to all parameters in Menu 0.
2	ALL	Access to all menus.
3	StAtUS	The keypad remains in status mode and no parameters can be viewed or edited.
4	no.Acc	The keypad remains in status mode and no parameters can be viewed or edited. Drive parameters cannot be accessed via a comms interface.

11	Start/Stop Logic Select								
RW	Num							US	
OL	⇕	0 to 6			⇨	5			
RFC-A									

This parameter changes the functions of the input terminals which are normally associated with the enabling, starting and stopping the drive.

Pr 11	Terminal 11	Terminal 12	Terminal 13	Latching
0	User programmable	Run Forward	Run Reverse	No
1	/Stop	Run Forward	Run Reverse	Yes
2	User programmable	Run	Forward/Reverse	No
3	/Stop	Run	Forward/Reverse	Yes
4	/Stop	Run	Jog Forward	Yes
5	User programmable	Run Forward	Run Reverse	No
6	User programmable	User programmable	User programmable	User programmable

Action will only occur if the drive is inactive. If the drive is active, the parameter will return to its pre-altered value on exit from edit mode.

15		**Jog Reference**								
RW		Num							US	
OL / **RFC-A**	⇳	0.00 to 300.00 Hz				⇨	1.50 Hz			

Defines the reference when jog is enabled.

16		**Analog Input 1 Mode**								
RW		Txt							US	
OL	⇳	4-20.S (-6), 20-4.S (-5), 4-20.L (-4), 20-4.L (-3), 4-20.H (-2), 20-4.H (-1), 0-20 (0), 20-0 (1), 4-20.tr (2), 20-4.tr (3), 4-20 (4), 20-4 (5), Volt (6)				⇨	Volt (6)			

Defines the mode of analog input 1.

The table below gives all the possible analog input modes.

Value	Text	Function
-6	4-20.S	Stop on loss
-5	20-4.S	Stop on loss
-4	4-20.L	4-20 mA switching to equivalent of 4 mA input current on loss
-3	20-4.L	20-4 mA switching to equivalent of 20 mA input current on loss
-2	4-20.H	4-20 mA hold at level before loss on loss
-1	20-4.H	20-4 mA hold at level before loss on loss
0	0-20	0-20 mA
1	20-0	20-0 mA
2	4-20.tr	4-20 mA trip on loss
3	20-4.tr	20-4 mA trip on loss
4	4-20	4-20 mA no action on loss
5	20-4	20-4 mA no action on loss
6	Volt	Voltage

NOTE In 4-20 mA and 20-4 mA modes loss of input is detected if the current falls below 3 mA.

NOTE If both analog inputs (A1 and A2) are to be set-up as voltage inputs, and if the potentiometers are supplied from the drive's +10 V rail (terminal T4), they must have a resistance > 4 kΩ each.

17		**Bipolar Reference Enable**								
RW		Bit							US	
OL / **RFC-A**	⇳	Off (0) or On (1)				⇨	Off (0)			

Pr **17** determines whether the reference is uni-polar or bi-polar.

See *Minimum Speed* (Pr **01**). Allows negative speed reference in keypad mode.

18 to 21		**Preset Reference 1 to 4**								
RW		Num							US	
OL / **RFC-A**	⇳	0.00 to Pr **02** Hz				⇨	0.00 Hz			

If the preset reference has been selected (see Pr **05**), the speed at which the motor runs is determined by these parameters.

See *Drive Configuration* (Pr **05**).

22		**Status Mode Parameter 2**								
RW		Num						PT	US	
OL / **RFC-A**	⇳	0.000 to 30.999				⇨	4.020			

This parameter and *Status Mode Parameter 1* (Pr **23**) define which parameters are displayed in Status mode. The values can be alternated by

pressing the Escape key, if the drive is running.

23		Status Mode Parameter 1								
RW		Num						PT	US	
OL / RFC-A	⇳	0.000 to 30.999			⇨	2.001				

See *Status Mode Parameter 2* (Pr **22**).

24		Customer Defined Scaling								
RW		Num							US	
OL / RFC-A	⇳	0.000 to 10.000			⇨	1.000				

This parameter defines the scaling applied to *Status Mode Parameter 1* (Pr **23**). The scaling is only applied in the Status mode.

25		User Security Code								
RW		Num				ND		PT	US	
OL / RFC-A	⇳	0-9999			⇨	0				

If any number other than 0 is programmed into this parameter, user security can be applied so that no parameters except Pr **10** can be adjusted with the keypad. When this parameter is read via a keypad it appears as zero. Refer to the *Control User Guide* for further information.

27		Power-up Keypad Control Mode Reference								
RW		Txt				ND	NC	PT	US	
OL / RFC-A	⇳	rESEt (0), LASt (1), PrESEt (2)			⇨	rESEt (0)				

Defines which value of keypad control mode reference is displayed at power-up.

Value	Text	Description
0	rESEt	Keypad reference is zero
1	LASt	Keypad reference is the last used value
2	PrESEt	Keypad reference is copied from *Preset Reference 1* (Pr **18**)

28		Ramp Mode Select								
RW		Txt							US	
OL / RFC-A	⇳	Fast (0), Std (1), Std.bst (2), Fst.bst (3)			⇨	Std (1)				

Defines the mode used by the ramp system.

0: Fast ramp
1: Standard ramp
2: Standard ramp with motor voltage boost
3: Fast ramp with motor voltage boost

Fast ramp is linear deceleration at programmed rate, normally used when a braking resistor is installed.

Standard ramp is controlled deceleration to prevent DC bus over-voltage trips, normally used when there is no braking resistor installed.

If a high motor voltage mode is selected, deceleration rates can be faster for a given inertia but motor temperatures will be higher.

29		Ramp Enable								
RW		Bit							US	
OL	⇳				⇨					
RFC-A		Off (0) or On (1)				On (1)				

Setting Pr **29** to 0 allows the user to disable the ramps. This is generally used when the drive is required to closely follow a speed reference which already contains acceleration and deceleration ramps.

30		Parameter Cloning								
RW	Txt					NC		US*		
OL	⇕	NonE (0), rEAd (1), Prog (2), Auto (3), boot (4)			⇨	NonE (0)				
RFC-A										

* Only a value of 3 or 4 in this parameter is saved.

If Pr **30** is equal to 1 or 2, this value is not transferred to the EEPROM or the drive. If Pr **30** is set to a 3 or 4 the value is transferred.

Parameter string	Parameter value	Comment
NonE	0	Inactive
rEAd	1	Read parameter set from the NV Media Card
Prog	2	Programming a parameter set to the NV Media Card
Auto	3	Auto save
boot	4	Boot mode

For further information, please refer to Chapter 9 *NV Media Card* on page 77.

31		Stop Mode								
RW	Txt							US		
OL	⇕	CoASt (0), rP (1), rP.dc I (2), dc I (3), td.dc I (4), dis (5)			⇨	rP (1)				
RFC-A		CoASt (0), rP (1), rP.dc I (2), dc I (3), td.dc I (4), dis (5), No.rP (6)								

Defines how the motor is controlled when the run signal is removed from the drive.

Value	Text	Description
0	CoASt	Coast stop
1	rP	Ramp stop
2	rP.dc I	Ramp stop + 1 second dc injection
3	dc I	Injection braking stop with detection of zero speed
4	td.dc I	Timed injection braking stop
5	dis	Disable
6	No.rP	No ramp (RFC-A mode only)

See the *Control User Guide* for further information.

32		Dynamic V To F Select / Flux Optimization Select								
RW	Num							US		
OL	⇕	0 to 1			⇨	0				
RFC-A										

Open-loop:

Set to 1 to enable Dynamic V to F mode in open-loop mode only.

0: Fixed linear voltage to frequency ratio (constant torque - standard load)

1: Voltage to frequency ratio dependant on load current. This gives a higher motor efficiency.

RFC-A:

If this parameter is set to 1, the flux is reduced so that the magnetizing current is equal to the torque producing current, to optimize copper losses and reduce iron losses in the motor under low load conditions.

33		Catch a Spinning Motor								
RW	Txt							US		
OL	⇕	dis (0), Enable (1), Fr.Only (2), Rv.Only (3)			⇨	dis (0)				
RFC-A										

If the drive is to be configured in fixed boost mode (Pr **41** = Fd or SrE) with catch a spinning motor software enabled, an autotune (see Pr **38** on page 48) must be carried out to measure the motor's stator resistance beforehand. If a stator resistance is not measured, the drive may trip on OV or OI.AC while trying to catch a spinning motor.

Pr 33	Text	Function
0	dis	Disabled
1	Enable	Detect all frequencies
2	Fr.Only	Detect positive frequencies only
3	Rv.Only	Detect negative frequencies only

34		Digital Input 5 Select							
RW	Txt							US	
OL / RFC-A	⇕	Input (0), th.Sct (1), th (2), th.Notr (3), Fr (4)			⇨	Input (0)			

This parameter selects the function of Digital Input 5 (terminal 14).

Value	Text	Function
0	Input	Digital input
1	th.Sct	Temperature measurement input with short circuit detection (Resistance <50 Ω)
2	th	Temperature measurement input without short circuit detection but with *th* trip
3	th.Notr	Temperature measurement input with no trips
4	Fr	Frequency input

Figure 6-12 Thermistor input

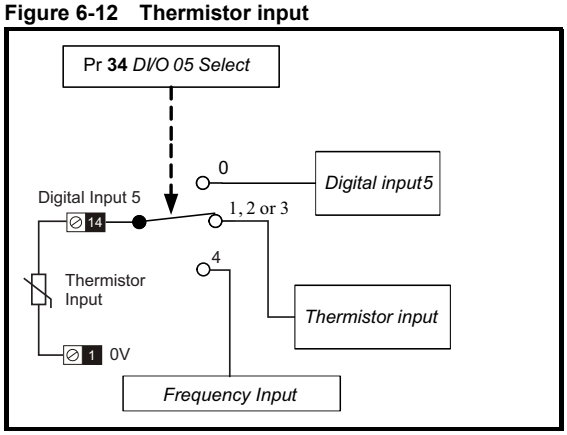

35		Digital Output 1 Control							
RW	Num							US	
OL / RFC-A	⇕	0-21			⇨	0			

Defines the behaviour of digital output 1 (terminal 10).

Value	Description
0	User defined by Digital IO1 Source/Destination A
1	Drive running signal
2	Frequency arrived signal
3	Frequency level detection signal
4	Frequency level detection signal
5	Overload detection signal

6	Power off state
7	External fault stop
8	Frequency upper limit
9	Frequency lower limit
10	Drive running at zero frequency
14	Drive ready
15	Drive OK
18	Brake release
19	Torque limiting (Valid while the torque is limited by torque limiting value 1/2)
20	Forward or reverse
21	Motor 1 or 2

36		**Analog Output 1 Control**							
RW	Txt							US	
OL	⇕	0 to 14			⇨	0			
RFC-A									

Defines the functionality of Analog Output 1 (terminal 7).

Value	Description
0	User defined by Analog Output 1 Source A
1	Frequency output
2	Frequency reference
3	Motor speed
4	Current Magnitude
6	Torque output
7	Torque current output
8	Voltage output
9	DC bus voltage (0~800 V)
10	Analog Input 1
11	Analog Input 2
12	Power output (0~2 x Pe)
13	Torque limitation
14	Torque reference (0~300 %)

37		**Maximum Switching Frequency**							
RW	Txt							US	
OL	⇕	0.667 (0), 1 (1), 2 (2), 3 (3), 4 (4), 6 (5), 8 (6), 12 (7), 16 (8) kHz			⇨	3 (3) kHz			
RFC-A		2 (2), 3 (3), 4 (4), 6 (5), 8 (6), 12 (7), 16 (8) kHz							

Defines the maximum switching frequency that can be used by the drive.

Pr 37	Text	Description
0	0.667	667 Hz switching frequency
1	1	1 kHz switching frequency
2	2	2 kHz switching frequency
3	3	3 kHz switching frequency
4	4	4 kHz switching frequency
5	6	6 kHz switching frequency
6	8	8 kHz switching frequency
7	12	12 kHz switching frequency
8	16	16 kHz switching frequency

See the *Power Installation Guide* for drive derating data.

38		Autotune							
RW		Num					NC		US
OL	⇳	0 to 2			⇨	0			
RFC-A		0 to 3							

Defines the auto-tune test to be performed.

There are two autotune tests available in open loop mode, a stationary and a rotating test. A rotating autotune should be used whenever possible so the measured value of power factor of the motor is used by the drive.

Open Loop and RFC-A:

1. A stationary autotune can be used when the motor is loaded and it is not possible to remove the load from the motor shaft. To perform a Stationary autotune, set Pr **38** to 1,
2. A rotating autotune should only be used if the motor is unloaded. A rotating autotune first performs a stationary autotune, as above, then a rotating test is performed in which the motor is accelerated with currently selected ramps up to a frequency of *Rated Frequency* (Pr **39**) x 2/3, and the frequency is maintained at that level for 4 seconds. To perform a Rotating autotune, set Pr **38** to 2.

RFC-A only:

3. This test measures the total inertia of the load and the motor. A series of progressively larger torque levels are applied to the motor to accelerate the motor up to 3/4 x *Motor Rated Speed* (Pr **07**) to determine the inertia from the acceleration/deceleration time.

Following the completion of an autotune test the drive will go into the inhibit state. The drive must be placed into a controlled disable condition before the drive can be made to run at the required reference. The drive can be put in to a controlled disable condition by removing the Safe Torque Off signal from terminals 31 & 34.

WARNING

A rotating autotune will cause the motor to accelerate up to 2/3 base speed in the direction selected regardless of the reference provided. Once complete the motor will coast to a stop. The Safe Torque Off signals must be removed before the drive can be made to run at the required reference.The drive can be stopped at any time by removing the run signal or removing the drive enable.

39		Motor Rated Frequency							
RW		Num					RA		US
OL	⇳	0.00 to 550.00 Hz*			⇨	Def.50: 50.00 Hz Def.60: 60.00 Hz			
RFC-A									

Enter the value from the rating plate of the motor. Defines the voltage to frequency ratio applied to the motor.

40		Number Of Motor Poles							
RW		Num							US
OL	⇳	Auto (0) to 32 (16)			⇨	Auto (0)			
RFC-A									

Set to the number of poles of the motor. The auto mode calculates the number of motor poles from the settings of Pr **07** and Pr **39**.

41		Control Mode							
RW		Txt							US
OL	⇳	Ur.S (0), Ur (1), Fd (2), Ur.Auto (3), Ur.I (4), SrE (5), Fd.tap (6)			⇨	Fd (2)			
RFC-A									

Defines the drive output mode, which can either be a voltage mode or a current mode.

Value	Text	Description
0	Ur.S	Stator resistance and voltage offset measured at each start
1	Ur	No measurements
2	Fd	Fixed boost mode.
3	Ur.Auto	Stator resistance and voltage offset measured at first drive enable
4	Ur.I	Stator resistance and voltage offset measured at each power-up
5	SrE	Square law characteristic
6	Fd.tap (6)	Fixed boost with taper

42		Low Frequency Voltage Boost								
RW		Num							US	
OL / RFC-A	⇕	0.0 to 25.0 %				⇨	3.0 %			

Determines the boost level when Pr **41** is set to Fd, SrE or Fd.tap modes.

43		Serial Baud Rate								
RW		Txt							US	
OL / RFC-A	⇕	600 (1), 1200 (2), 2400 (3), 4800 (4), 9600 (5), 19200 (6), 38400 (7), 57600 (8), 76800 (9), 115200 (10)				⇨	19200 (6)			

Defines the serial baud rate of the drive

Changing the parameters does not immediately change the serial communications settings. See *Reset Serial Communications* (Pr **45**) for more details.

44		Serial Address								
RW		Num							US	
OL / RFC-A	⇕	1 to 247				⇨	1			

Used to define the unique address for the drive for the serial interface. The drive is always a slave address 0 is used to globally address all slaves, and so this address should not be set in this parameter.

Changing the parameters does not immediately change the serial communications settings. See *Reset Serial Communications* (Pr **45**) for more details.

45		Reset Serial Communications								
RW		Bit				ND	NC		US	
OL / RFC-A	⇕	Off (0) or On (1)				⇨	Off (0)			

Set to On (1) to update communications set-up.

NOTE The display will briefly display On and return to Off on reset.

46		Brake Controller Upper Current Threshold								
RW		Num							US	
OL / RFC-A	⇕	0 to 200 %				⇨	50 %			

Defines the upper current threshold for the brake. See Brake Controller Brake Release in *Parameter Reference Guide*.

47		Brake Controller Lower Current Threshold								
RW		Num							US	
OL / RFC-A	⇕	0 to 200 %				⇨	10 %			

Defines the lower current limit for the brake. See Brake Controller Brake Release in *Parameter Reference Guide*.

48		Brake Controller Brake Release Frequency								
RW		Num							US	
OL / RFC-A	⇕	0.00 to 20.00 Hz				⇨	1.00 Hz			

Defines the Brake Release Frequency. See Brake Controller Brake Release in *Parameter Reference Guide.*

49	Brake Controller Brake Apply Frequency								
RW	Num							US	
OL / RFC-A	⇳	0.00 to 20.00 Hz			⇨	2.00 Hz			

Defines the Brake Apply Frequency. See Brake Controller Brake Release in *Parameter Reference Guide.*

50	Brake Controller Brake Delay								
RW	Num							US	
OL / RFC-A	⇳	0.0 to 25.0 s			⇨	1.0 s			

Defines the pre-brake release delay. See Brake Controller Brake Release in *Parameter Reference Guide*.

51	Brake Controller Post-brake Release Delay								
RW	Num							US	
OL / RFC-A	⇳	0.0 to 25.0 s			⇨	1.0 s			

Defines the post-brake release delay.

53	Brake Controller Initial Direction								
RW	Txt							US	
OL / RFC-A	⇳	rEF (0), For (1), rEv (2)			⇨	rEF (0)			

Defines the initial direction of the brake.

Value	Text
0	rEF
1	For
2	rEv

See Brake Controller Brake Release in *Parameter Reference Guide*.

54	Brake Controller Brake Apply Through Zero Threshold								
RW	Num							US	
OL / RFC-A	⇳	0.00 to 25.00 Hz			⇨	1.00 Hz			

Defines if the brake is applied through zero threshold. See Brake Controller Brake Release in *Parameter Reference Guide*.

55	Brake Controller Enable								
RW	Txt							US	
OL / RFC-A	⇳	diS (0), rELAy (1), dig IO (2), USEr (3)			⇨	diS (0)			

Value	Text
0	diS
1	rELAy
2	dig IO
3	USEr

If *Brake Controller Enable* (Pr **55**) = diS, the brake controller is disabled.

If *Brake Controller Enable* (Pr **55**) = rELAy, the brake controller is enabled with I/O set up to control the brake via the relay output. Drive ok is re-routed to digital I/O.

If *Brake Controller Enable* (Pr **55**) = dig IO, the brake controller is enabled with I/O set up to control the brake via digital I/O. Drive ok is routed to the relay output.

If *Brake Controller Enable* (Pr **55**) = USEr, the brake controller is enabled, but no parameters are set up to select the brake output.

56 to 58		Trip 0 to 2								
RO	Txt				ND	NC	PT	PS		
OL / RFC-A	⇳	0 to 255			⇨					

These parameters show the last 3 trips.

59		OUP Enable								
RW	Txt							US		
OL / RFC-A	⇳	Stop (0) or Run (1)			⇨	Run (1)				

Enables the onboard user program.

Onboard user programming provides a background task that loops continuously and a timed task that is executed each time at a defined rate. For further information, refer to the *Parameter Reference Guide.*

60		OUP Status								
RO	Num				ND	NC	PT			
OL / RFC-A	⇳	-2147483648 to 2147483647			⇨					

This parameter indicates the status of the user program in the drive. For further information, refer to the *Parameter Reference Guide.*

64		Ramp Rate Units								
RW	Num							US		
OL / RFC-A	⇳	0 to 2			⇨	1				

The ramp rate parameters (*Acceleration Rate 1* (02.011) - *Acceleration Rate 8* (02.018), *Jog Acceleration Rate* (02.019), *Deceleration Rate 1* (02.021) - *Deceleration Rate 8* (02.028) and *Jog Deceleration Rate* (02.029)) are specified in *s / Ramp Rate Frequency*. Ramp rate frequency is selected with *Ramp Rate Units* (02.039) as defined in the table below.

***Ramp Rate Units* (02.039)**	**Ramp rate frequency**
0	Seconds per 100 Hz
1	Seconds per Maximum Frequency
2	Seconds per 1000 Hz

Maximum frequency is defined by *Maximum Speed* (01.006) if *Select Motor 2 Parameters* (11.045) = 0 or *M2 Maximum Speed* (21.001) if *Select Motor 2 Parameters* (11.045) = 1.

65		Frequency Controller Proportional Gain Kp1								
RW	Num							US		
OL	⇳				⇨					
RFC-A		0.000 to 200.000 s/rad				0.100 s/rad				

Defines the proportional gain for frequency controller 1.

RFC modes only.

The controller includes a feed forward proportional gain (Kp), a feed forward integral gain (Ki), and a differential feedback gain (Kd).

Proportional gain (Kp)

If Kp is non-zero and Ki is zero the controller will only have a proportional term, and there must be a frequency error to produce a torque reference. Therefore as the motor load increases there will be a difference between the reference and actual frequencies.

Integral gain (Ki)

The integral gain is provided to prevent frequency regulation. The error is accumulated over a period of time and used to produce the necessary torque reference without any frequency error. Increasing the integral gain reduces the time taken for the frequency to reach the correct level and increases the stiffness of the system, i.e. it reduces the positional displacement produced by applying a load torque to the motor.

66		Frequency Controller Integral Gain Ki1								
RW		Num							US	
OL	⇳					⇨				
RFC-A		0.00 to 655.35 s²/rad					0.10 s²/rad			

Defines the integral gain for frequency controller 1. See *Frequency Controller Proportional Gain Kp1* (Pr **65**).

67		Sensorless Mode Filter								
RW		Txt							US	
OL	⇳					⇨				
RFC-A		4 (0), 5 (1), 6 (2), 8 (3), 12 (4), 20 (5) ms					4 (0) ms			

Defines the time constant for the filter applied to the output of the frequency estimator system.

69		Spin Start Boost								
RW		Num							US	
OL	⇳	0.0 to 10.0				⇨	1.0			
RFC-A										

Spin Start Boost (Pr **69**) is used by the algorithm that detects the frequency of a spinning motor when the drive is enabled and *Catch A Spinning Motor* (Pr **33**) ≥ 1. For smaller motors the default value of 1.0 is suitable, but for larger motors *Spin Start Boost* (Pr **69**) may need to be increased.

If *Spin Start Boost* (Pr **69**) is too small the drive will detect zero speed whatever the frequency of the motor, and if *Spin Start Boost* (Pr **69**) is too large the motor may accelerate away from standstill when the drive is enabled.

70		PID1 Output								
RO		Num				ND	NC	PT		
OL	⇳	±100.00 %				⇨				
RFC-A										

This parameter is the output of the PID controller. For further information, refer to the *Parameter Reference Guide.*

71		PID1 Proportional Gain								
RW		Num							US	
OL	⇳	0.000 to 4.000				⇨	1.000			
RFC-A										

Proportional gain applied to the PID error. For further information, refer to the *Parameter Reference Guide.*

72		PID1 Integral Gain								
RW		Num							US	
OL	⇳	0.000 to 4.000				⇨	0.500			
RFC-A										

Integral gain applied to the PID error. For further information, refer to the *Parameter Reference Guide.*

73		PID1 Feedback Invert								
RW		Bit							US	
OL	⇳	Off (0) or On (1)				⇨	Off (0)			
RFC-A										

This parameter allows the PID feedback source to be inverted. For further information, refer to the *Parameter Reference Guide.*

74		PID1 Output Upper Limit								
RW		Num							US	
OL	⇳	0.00 to 100.00 %				⇨	100.00 %			
RFC-A										

This parameter with *PID1 Output Lower Limit* (Pr **75**) allows the output to be limited to a range. For further information, refer to the *Parameter Reference Guide.*

75		PID1 Output Lower Limit							
RW	Num							US	
OL / RFC-A	⇳	±100.00 %			⇨	-100.00 %			

See *PID1 Output Upper Limit* (Pr **74**).

76		Action On Trip Detection							
RW	Num				ND	NC	PT	US	
OL / RFC-A	⇳	0 - 31			⇨	0			

Bit 0: Stop on defined non-important trips
Bit 1: Disable braking resistor overload detection
Bit 2: Disable phase loss stop
Bit 3: Disable braking resistor temperature monitoring
Bit 4: Disable parameter freeze on trip. Refer to *Parameter Reference Guide.*

77		Maximum Heavy Duty Rating							
RO	Num				ND	NC	PT		
OL / RFC-A	⇳	0.00 to Drive HD Current Rating A			⇨				

Displays the maximum heavy duty current rating of the drive.

78		Software Version							
RO	Num				ND	NC	PT		
OL / RFC-A	⇳	0 to 99.99.99			⇨				

Displays the software version in the drive.

79		User Drive Mode							
RW	Txt				ND	NC	PT	US	
OL / RFC-A	⇳	OPEn.LP (1), RFC-A (2)			⇨	OPEn.LP (1) RFC-A (2)			

Defines the mode of the drive.

81		Reference Selected							
RO	Num				ND	NC	PT		
OL / RFC-A	⇳	-Pr **02** to Pr **02** or Pr **01** to Pr **02** Hz			⇨				

This is the basic reference selected from the available sources.

82		Pre-ramp Reference							
RO	Num				ND	NC	PT		
OL / RFC-A	⇳	-Pr **02** to Pr **02** or Pr **01** to Pr **02** Hz			⇨				

The *Pre-ramp Reference* is the final output from the reference system that is fed into the ramp system.

83		Final Demand Reference							
RO	Num				ND	NC	PT	FI	
OL / RFC-A	⇳	-Pr **02** to Pr **02** or Pr **01** to Pr **02** Hz			⇨				

Open loop mode:

Final Demand Reference shows the fundamental drive output frequency from the *Post Ramp Reference* and the *Hard Frequency Reference*.

RFC mode:

Final Demand Reference shows the reference at the input to the frequency controller, which is the sum of the *Post Ramp Reference*, if the ramp output is not disabled and the hard frequency reference (if enabled). If the drive is disabled *Final Demand Reference* shows 0.00.

84		D.C. Bus Voltage								
RO		Num				ND	NC	PT	FI	
OL / RFC-A	⇳	0 to 415 V or 0 to 830 V				⇨				

Voltage across the internal DC bus of the drive.

85		Output Frequency								
RO		Num				ND	NC	PT	FI	
OL / RFC-A	⇳	± 550.00 Hz				⇨				

Open loop mode:

The *Output Frequency* is the sum of the *Post Ramp Reference* and the motor slip compensation frequency.

RFC-A mode:

The output frequency is not controlled directly, but the *Output Frequency* is a measurement of the frequency applied to the motor.

86		Output Voltage								
RO		Num				ND	NC	PT	FI	
OL / RFC-A	⇳	0 to 325 V or 0 to 650 V				⇨				

The *Output Voltage* is the r.m.s line to line voltage at the a.c. terminals of the drive.

87		Motor Rpm								
RO		Num				ND	NC	PT	FI	
OL / RFC-A	⇳	±33000.0 rpm*				⇨				

Motor Rpm = 60 x Frequency / Pole pairs

where

Pole pairs = the numeric value of *Number Of Motor Poles* (Pr **40**) (i.e. 3 for a 6 pole motor)

The frequency used to derive the *Motor Rpm* is the *Final Demand Reference* (Pr **83**). The maximum and minimum values allow for a 10% over-shoot of the speed.

88		Current Magnitude								
RO		Num				ND	NC	PT	FI	
OL / RFC-A	⇳	0 to Drive Maximum Current A				⇨				

Current Magnitude is the instantaneous drive output current scaled so that it represents the r.m.s. phase current in Amps under steady state conditions.

89		Torque Producing Current								
RO		Num				ND	NC	PT	FI	
OL / RFC-A	⇳	± Drive Maximum Current A				⇨				

Torque Producing Current is the instantaneous level of torque producing current scaled so that it represents the r.m.s. level of torque producing current under steady state conditions.

90	**Digital I/O Read Word**								
RO	Bin				ND	NC	PT		
OL / **RFC-A**	⇳	0 to 2047			⇨				

Digital I/O Read Word reflects the state of digital inputs/outputs 1 to 5 and the relay.

91	**Reference On**								
RO	Bit				ND	NC	PT		
OL / **RFC-A**	⇳	Off (0) or On (1)			⇨				

Reference On, which is controlled by the drive sequencer, indicates that the reference from the reference system is active.

92	**Reverse Select**								
RO	Bit				ND	NC	PT		
OL / **RFC-A**	⇳	Off (0) or On (1)			⇨				

Reverse Select, which is controlled by the drive sequencer, is used to invert *Reference Selected* (Pr **81**) or the *Jog Reference* (Pr **15**).

93	**Jog Select**								
RO	Bit				ND	NC	PT		
OL / **RFC-A**	⇳	Off (0) or On (1)			⇨				

Jog Select, which is controlled by the drive sequencer, is used to select the *Jog Reference* (Pr **15**).

94	**Analog Input 1**								
RO	Num				ND	NC	PT	FI	
OL / **RFC-A**	⇳	±100.00 %			⇨				

This parameter displays the level of the analog signal present at analog input 1 (terminal 2).

95	**Analog Input 2**								
RO	Num				ND	NC	PT	FI	
OL / **RFC-A**	⇳	±100.00 %			⇨				

This parameter displays the level of the analog signal present at analog input 2 (terminal 5).

7 Running the motor

This chapter takes the new user through all the essential steps to running a motor for the first time, in each of the possible operating modes.

For information on tuning the drive for the best performance, see Chapter 8 *Optimization* on page 63.

WARNING

Ensure that no damage or safety hazard could arise from the motor starting unexpectedly.

CAUTION

The values of the motor parameters affect the protection of the motor.
The default values in the drive should not be relied upon.
It is essential that the correct value is entered in Pr **06** *Motor Rated Current*. This affects the thermal protection of the motor.

CAUTION

If the drive is started using the keypad it will run to the speed defined by the keypad reference (Pr **01.017**). This may not be acceptable depending on the application. The user must check in Pr **01.017** and ensure that the keypad reference has been set to 0.

WARNING

If the intended maximum speed affects the safety of the machinery, additional independent over-speed protection must be used.

7.1 Quick start connections

7.1.1 Basic requirements

This section shows the basic connections which must be made for the drive to run in the required mode. For minimal parameter settings to run in each mode please see the relevant part of section 7.3 *Quick start commissioning / start-up* on page 61.

Table 7-1 Minimum control connection requirements for each control mode

Drive control method	Requirements
Terminal mode	Drive enable Speed / Torque reference Run forward / Run reverse
Keypad mode	Drive enable
Serial communications	Drive enable Serial communications link

7.2 Changing the operating mode

Procedure

Use the following procedure only if a different operating mode is required:

1. Ensure that the drive is not enabled, i.e. drive is in inhibit or under voltage state.
2. Change the setting of Pr **79** as follows:

Pr 79 setting		Operating mode
OPEnLP	1	Open-loop
rFC-A	2	RFC-A

The figures in the second column apply when serial communications are used.

3. Either:

- Press the red reset button
- Carry out a drive reset through serial communications by setting Pr **10.038** to 100.

NOTE

When the operating mode is changed, a parameter save is carried out.

Figure 7-1 Minimum connections to get the motor running in any operating mode (size 1 to 4)

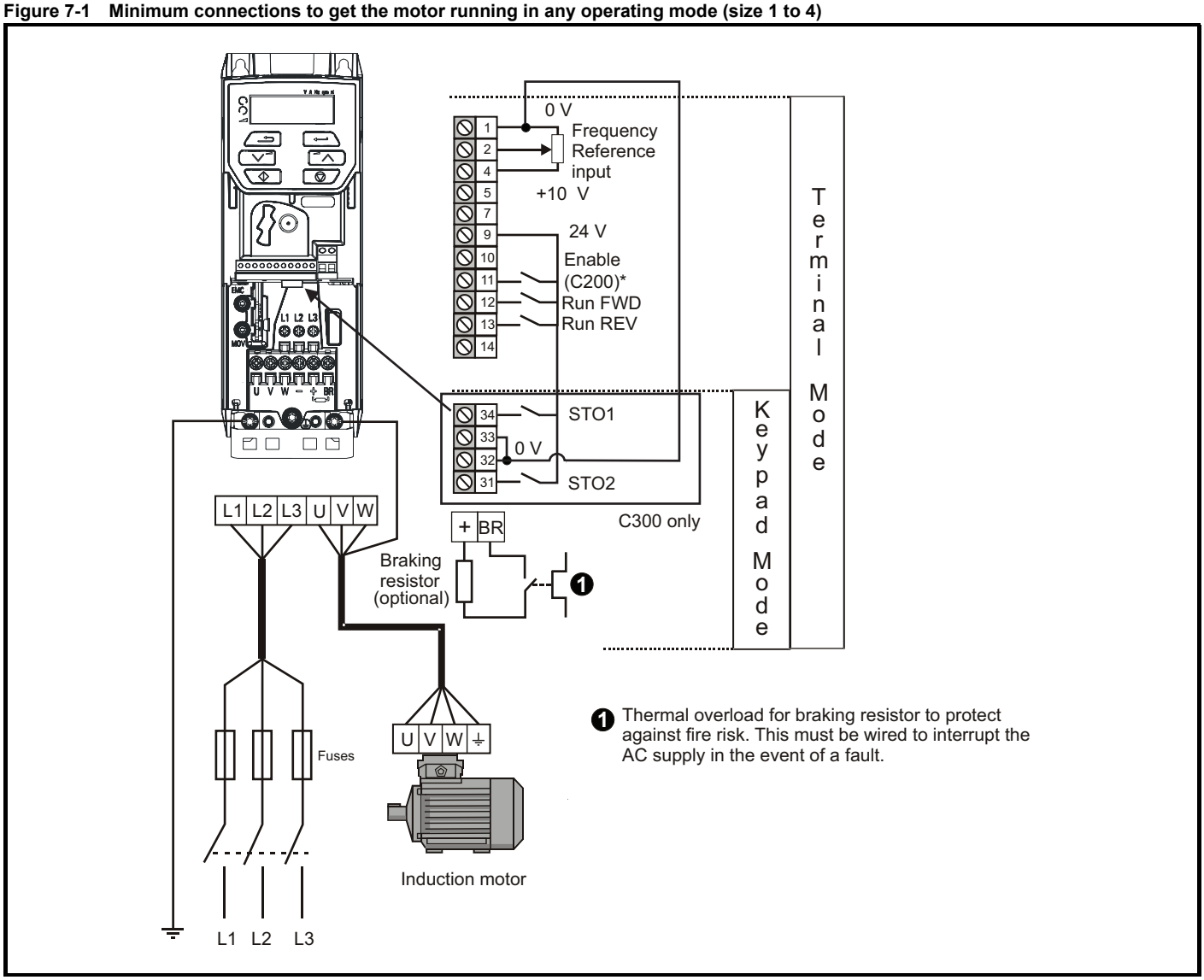

* Terminal 11 unassigned on Commander C300

Figure 7-2 Minimum connections to get the motor running in any operating mode (size 5)

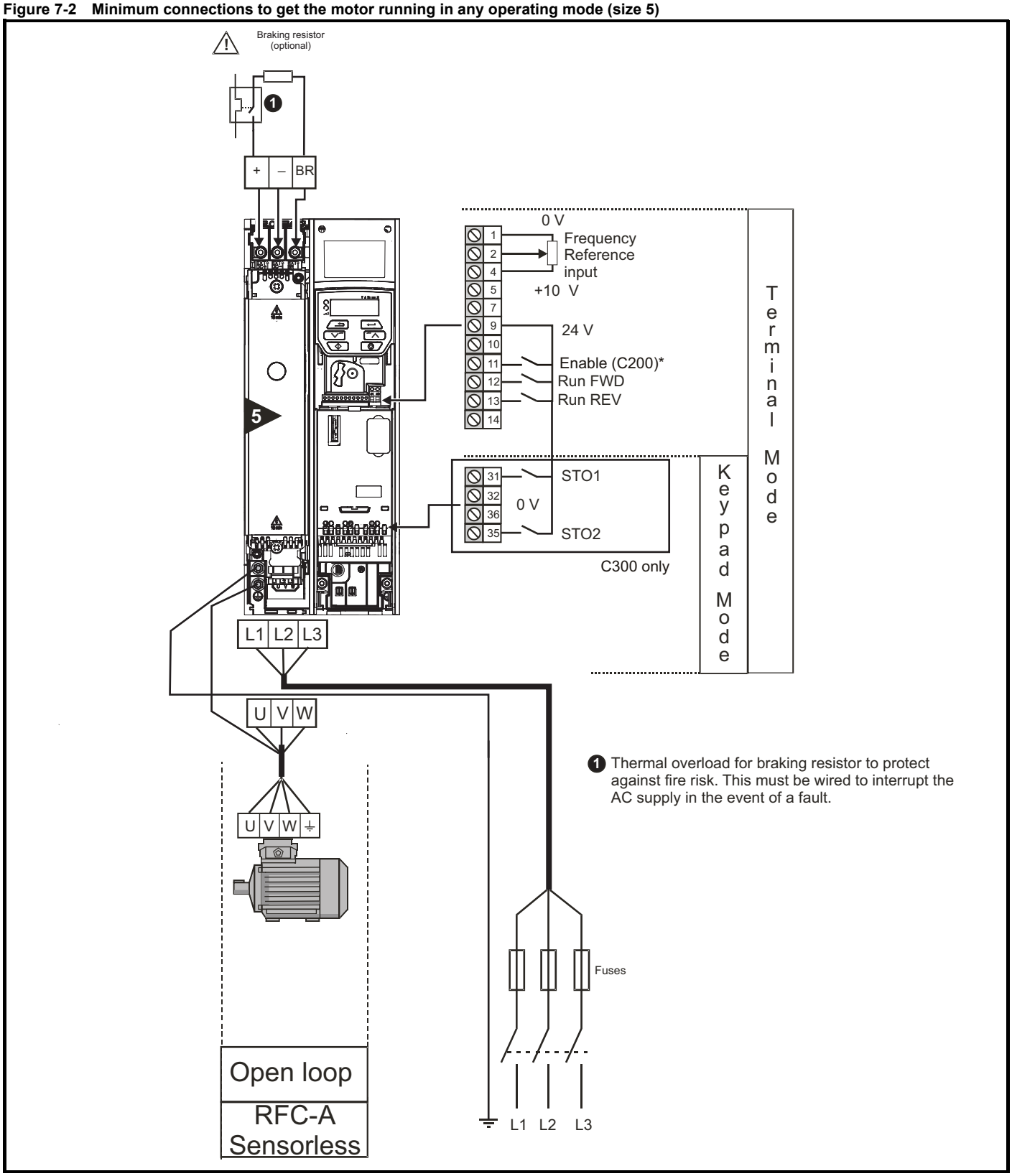

* Terminal 11 unassigned on Commander C300

Figure 7-3 Minimum connections to get the motor running in any operating mode (size 6)

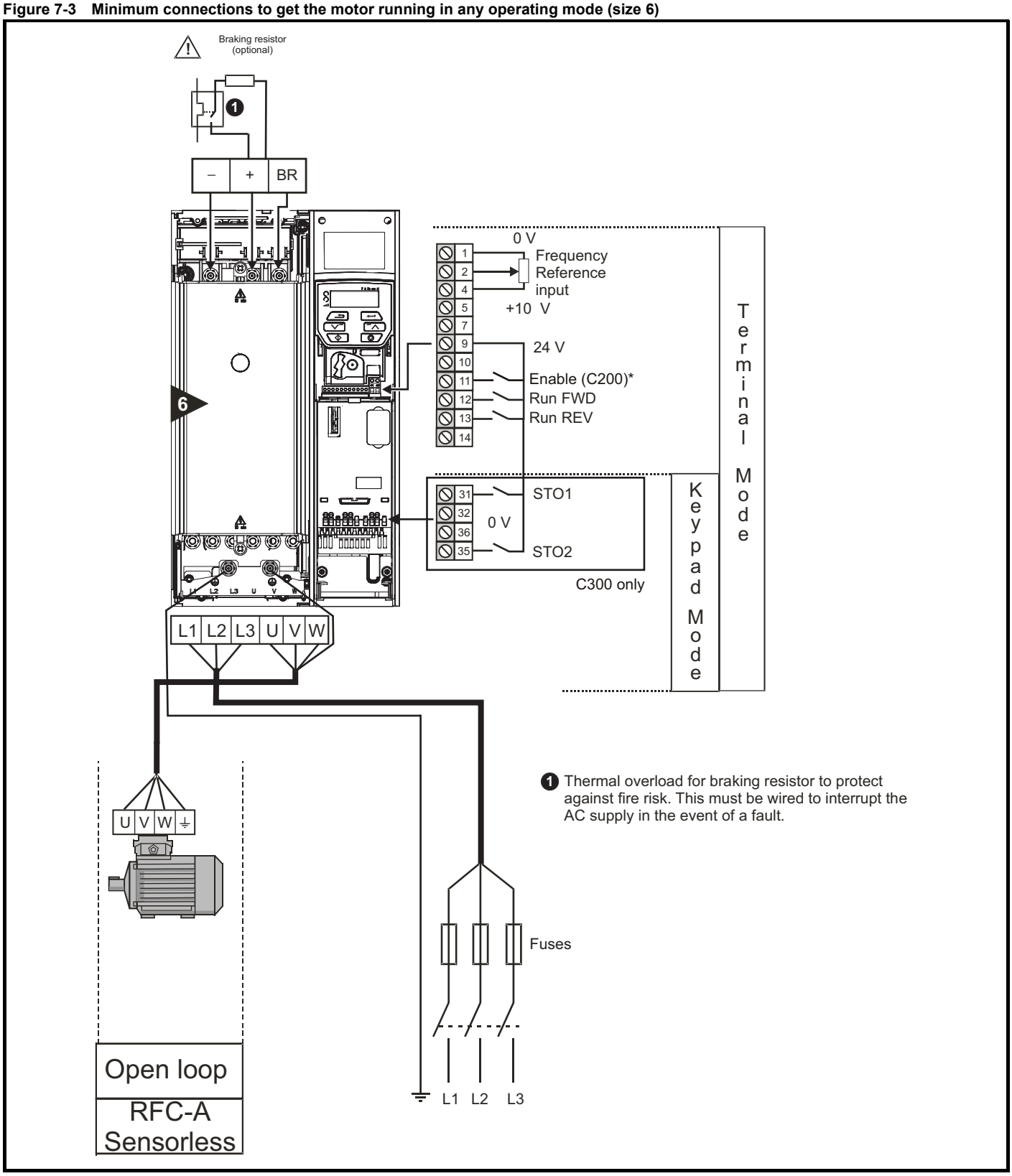

* Terminal 11 unassigned on Commander C300

Figure 7-4 Minimum connections to get the motor running in any operating mode (size 7 onwards)

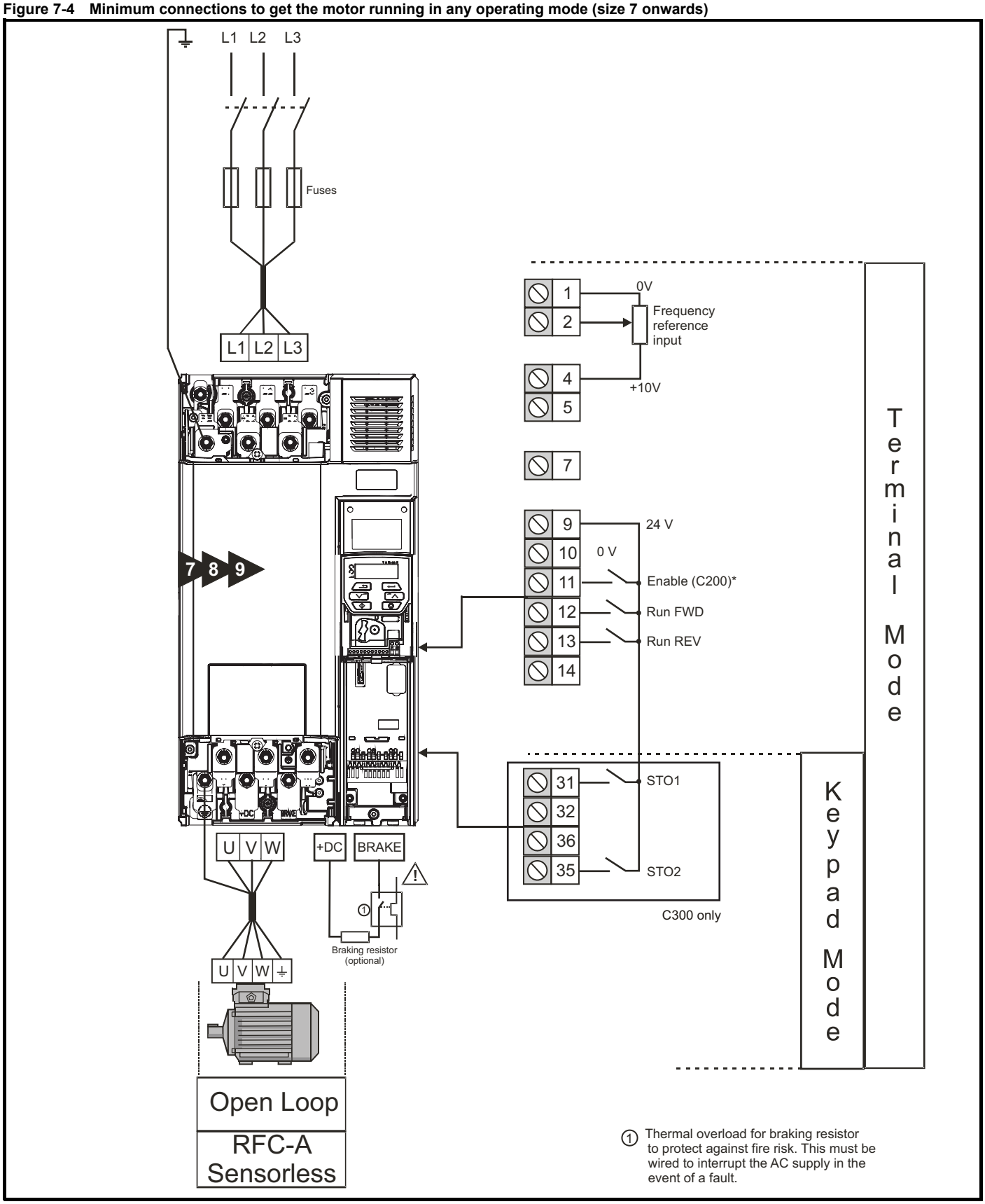

* Terminal 11 unassigned on Commander C300

7.3 Quick start commissioning / start-up

7.3.1 Open loop

Action	Detail	
Before power-up	Ensure: • The drive enable signal is not given (terminals 31 & 34 on size 1 to 4 or terminals 31 & 35 on size 5 to 9 is open) • Run signal is not given, terminal 12/13 is open. • Motor is connected to the drive. • The motor connection is correct for the drive ⅄ or Δ connection. • The correct supply voltage is connected to the drive.	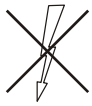
Power-up the drive	Verify that open loop mode is displayed as the drive powers up. If the mode is incorrect see section 5.6 *Changing the operating mode* on page 28. Ensure: • Drive displays 'inh' (enable terminals are open). If the drive trips, see Chapter 12 *Diagnostics* on page 147.	
Enter motor nameplate details	❶ Motor rated current in Pr **06** (Amps) ❷ Motor rated speed in Pr **07** (rpm / min^{-1}) ❸ Motor rated voltage in Pr **08** (Volts) ❹ Motor rated power factor (cos ϕ) in Pr **09**	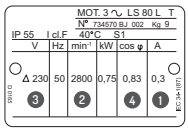
Set maximum speed	Enter: • Maximum speed in Pr **02** (Hz)	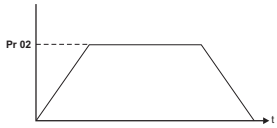
Set acceleration / deceleration rates	Enter: • Acceleration rate in Pr **03** (s/Maximum Frequency) • Deceleration rate in Pr **04** (s/Maximum Frequency) (If braking resistor is installed, set Pr **28** = FAST. Also ensure Pr **10.030** and Pr **10.031** and Pr **10.061** are set correctly, otherwise premature 'It.br' trips may be seen).	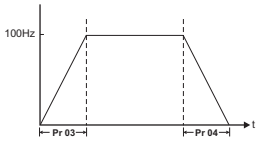
Autotune	The drive is able to perform either a stationary or a rotating autotune. The motor must be at a standstill before an autotune is enabled. A rotating autotune should be used whenever possible so the measured value of power factor of the motor is used by the drive. **WARNING** A rotating autotune will cause the motor to accelerate up to $^{2}/_{3}$ base speed in the direction selected regardless of the reference provided. Once complete the motor will coast to a stop. The enable signal must be removed before the drive can be made to run at the required reference. The drive can be stopped at any time by removing the run signal or removing the drive enable. • A stationary autotune can be used when the motor is loaded and it is not possible to uncouple the load from the motor shaft. A stationary autotune measures the stator resistance of the motor and the dead time compensation for the drive. These are required for good performance in vector control modes. A stationary autotune does not measure the power factor of the motor so the value on the motor nameplate must be entered into Pr **09**. • A rotating autotune should only be used if the motor is uncoupled. A rotating autotune first performs a stationary autotune before rotating the motor at $^{2}/_{3}$ base speed in the direction selected. The rotating autotune measures the power factor of the motor. To perform an autotune: • Set Pr **38** = 1 for a stationary autotune or set Pr **38** = 2 for a rotating autotune • Close the drive enable signal (apply 24V to terminal 11 on C200 or terminal 31 and 34 on C300 size 1 to 4 or terminal 31 and 35 on C300 size 5 to 9). The drive will display 'rdy'. • Give a run command (apply +24 V to terminal 12 - Run forward or terminal 13 - Run reverse). The display will flash 'tuning' while the drive is performing the autotune. • Wait for the drive to display 'inh' and for the motor to come to a standstill. If the drive trips, see Chapter 12 *Diagnostics* on page 147. • Remove the drive enable and run signal from the drive.	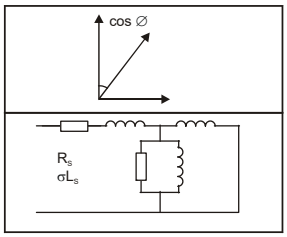
Save parameters	Select 'Save' in Pr **00** or Pr **mm.000** (alternatively enter a value of 1001) and press the red reset button.	
Run	Drive is now ready to run	

7.3.2 RFC - A mode

Action	Detail	
Before power-up	Ensure: • The drive enable signal is not given (terminal 31 & 34 on size 1 to 4 or terminals 31 & 35 on size 5 to 9 is open) • Run signal is not given, terminal 12/13 is open. • Motor is connected to the drive. • The motor connection is correct for the drive ⅄ or Δ connection. • The correct supply voltage is connected to the drive.	
Power-up the drive	Verify that RFC-A mode is displayed as the drive powers up. If the mode is incorrect see section 5.6 *Changing the operating mode* on page 28. Ensure: • Drive displays 'inh' (enable terminals are open). If the drive trips, see Chapter 12 *Diagnostics* on page 147.	
Enter motor nameplate details	❶ Motor rated current in Pr **06** (Amps) ❷ Motor rated speed in Pr **07** (rpm / min^{-1})* ❸ Motor rated voltage in Pr **08** (Volts) ❹ Motor rated power factor (cos ϕ) in Pr **09**	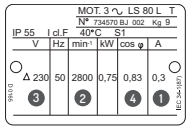
Set maximum speed	Enter: • Maximum speed in Pr **02** (Hz)	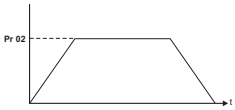
Set acceleration / deceleration rates	Enter: • Acceleration rate in Pr **03** (s/Maximum Frequency) • Deceleration rate in Pr **04** (s/Maximum Frequency) (If braking resistor is installed, set Pr **28** = FAST. Also ensure Pr **10.030**, Pr **10.031** and Pr **10.061** are set correctly, otherwise premature 'It.br' trips may be seen).	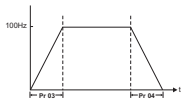
Autotune	The drive is able to perform either a stationary or a rotating autotune. The motor must be at a standstill before an autotune is enabled. A stationary autotune will give moderate performance whereas a rotating autotune will give improved performance as it measures the actual values of the motor parameters required by the drive. **WARNING** A rotating autotune will cause the motor to accelerate up to $^{2}/_{3}$ base speed in the direction selected regardless of the reference provided. Once complete the motor will coast to a stop. The enable signal must be removed before the drive can be made to run at the required reference. The drive can be stopped at any time by removing the run signal or removing the drive enable. • A stationary autotune can be used when the motor is loaded and it is not possible to uncouple the load from the motor shaft. The stationary autotune measures the stator resistance and transient inductance of the motor. These are used to calculate the current loop gains, and at the end of the test the values in Pr **04.013** and Pr **04.014** are updated. A stationary autotune does not measure the power factor of the motor so the value on the motor nameplate must be entered into Pr **09**. • A rotating autotune should only be used if the motor is uncoupled. A rotating autotune first performs a stationary autotune before rotating the motor at $^{2}/_{3}$ base speed in the direction selected. The rotating autotune measures the stator inductance of the motor and calculates the power factor. To perform an autotune: • Set Pr **38** = 1 for a stationary autotune or set Pr **38** = 2 for a rotating autotune • Close the drive enable signal (apply 24V to terminal 11 on C200 or terminal 31 and 34 on C300 size 1 to 4 or terminal 31 and 35 on C300 size 5 to 9). The drive will display 'rdy'. • Give a run command (apply +24 V to terminal 12 - Run forward or terminal 13 - Run reverse). The display will flash 'tuning' while the drive is performing the autotune. • Wait for the drive to display 'inh' and for the motor to come to a standstill. If the drive trips, see Chapter 12 *Diagnostics* on page 147. • Remove the drive enable and run signal from the drive.	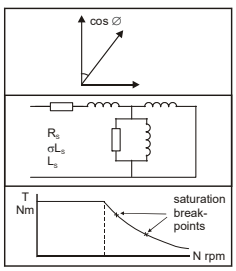
Save parameters	Select 'Save' in Pr **00** or Pr **mm.000** (alternatively enter a value of 1001) and press red reset button.	
Run	The drive is now ready to run	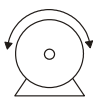

* Slip is required for RFC-A mode.

8 Optimization

This chapter takes the user through methods of optimizing the drive set-up and maximize the performance. The auto-tuning features of the drive simplify the optimization tasks.

8.1 Motor map parameters

8.1.1 Open loop motor control

Pr 06 {05.007} *Motor Rated Current*	**Defines the maximum continuous motor current**

- The rated current parameter must be set to the maximum continuous current of the motor. The motor rated current is used in the following:
- Current limits (see section section 8.3 *Current limits* on page 70, for more information)
- Motor thermal overload protection (see section section 8.4 *Motor thermal protection* on page 70, for more information)
- Vector mode voltage control (see *Control Mode* later in this table)
- Slip compensation (see *Enable Slip Compensation* (05.027), later in this table)
- Dynamic V/F control

Pr 08 {05.009} *Motor Rated Voltage*	**Defines the voltage applied to the motor at rated frequency**
Pr 39 {05.006} *Motor Rated Frequency*	**Defines the frequency at which rated voltage is applied**

The *Motor Rated Voltage* (Pr **08**) and the *Motor Rated Frequency* (Pr **39**) are used to define the voltage to frequency characteristic applied to the motor (see *Control Mode*, later in this table). The *Motor Rated Frequency* is also used in conjunction with the motor rated speed to calculate the rated slip for slip compensation (see *Motor Rated Speed*, later in this table).

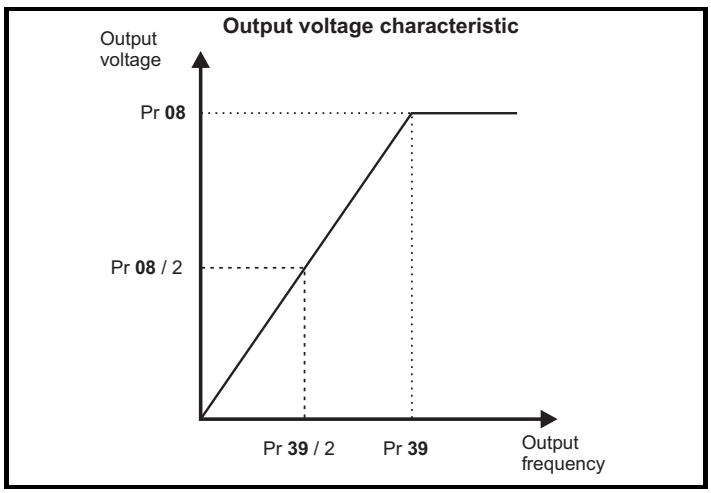

Pr 07 {05.008} *Motor Rated Speed*	**Defines the full load rated speed of the motor**
Pr 40 {05.011} *Number of Motor Poles*	**Defines the number of motor poles**

The motor rated speed and the number of poles are used with the motor rated frequency to calculate the rated slip of induction machines in Hz.

Rated slip (Hz) = Motor rated frequency - (Number of pole pairs x [Motor rated speed / 60]) = $\mathbf{Pr39} = \left(\frac{\mathbf{Pr40}}{\mathbf{2}} \times \frac{\mathbf{Pr07}}{\mathbf{60}}\right)$

If Pr **07** is set to 0 or to synchronous speed, slip compensation is disabled. If slip compensation is required this parameter should be set to the nameplate value, which should give the correct rpm for a hot machine. Sometimes it will be necessary to adjust this when the drive is commissioned because the nameplate value may be inaccurate. Slip compensation will operate correctly both below base speed and within the field-weakening region. Slip compensation is normally used to correct for the motor speed to prevent speed variation with load. The rated load rpm can be set higher than synchronous speed to deliberately introduce speed droop. This can be useful to aid load sharing with mechanically coupled motors.

Pr **40** is also used in the calculation of the motor speed display by the drive for a given output frequency. When Pr **40** is set to 'Auto', the number of motor poles is automatically calculated from the rated frequency Pr **39**, and the motor rated speed Pr **07**.

Number of poles = 120 x (*Rated Frequency* (Pr **39**) / *Rated Speed* (Pr **07**)) rounded to the nearest even number.

Pr 43 {05.010} *Motor Rated Power Factor*	**Defines the angle between the motor voltage and current**

The power factor is the true power factor of the motor, i.e. the angle between the motor voltage and current. The power factor is used in conjunction with the *Motor Rated Current* (Pr **06**), to calculate the rated active current and magnetising current of the motor. The rated active current is used extensively to control the drive, and the magnetising current is used in vector mode stator resistance compensation. It is important that this parameter is set up correctly. The drive can measure the motor rated power factor by performing a rotating autotune (see *Autotune* (Pr **38**), overleaf).

Pr 38 {05.012} *Auto-tune*	

There are two autotune tests available in open loop mode, a stationary and a rotating test. A rotating autotune should be used whenever possible so the measured value of power factor of the motor is used by the drive.

- A stationary autotune can be used when the motor is loaded and it is not possible to remove the load from the motor shaft. The stationary test measures the *Stator Resistance* (05.017), *Transient Inductance* (05.024), *Maximum Deadtime Compensation* (05.059) and *Current At Maximum Deadtime Compensation* (05.060) which are required for good performance in vector control modes (see *Control Mode* later in this table). The stationary autotune does not measure the power factor of the motor so the value on the motor nameplate must be entered into Pr **09**. To perform a Stationary autotune, set Pr **38** to 1, and provide the drive with both an enable signal (on terminals 31 & 34 on size 1 to 4 or terminals 31 & 35 on size 5 to 9) and a run signal (on terminals 12 or 13).

- A rotating autotune should only be used if the motor is unloaded. A rotating autotune first performs a stationary autotune, as above, then a rotating test is performed in which the motor is accelerated with currently selected ramps up to a frequency of *Motor Rated Frequency* (Pr **39**) x 2/3, and the frequency is maintained at that level for 4 seconds. *Stator Inductance* (05.025) is measured and this value is used in conjunction with other motor parameters to calculate *Motor Rated Power Factor* (Pr **09**). To perform a Rotating autotune, set Pr **38** to 2, and provide the drive with both an enable signal (on terminals 31 & 34 on size 1 to 4 or terminals 31 & 35 on size 5 to 9) and a run signal (on terminals 12 or 13).

Following the completion of an autotune test the drive will go into the inhibit state. The drive must be placed into a controlled disable condition before the drive can be made to run at the required reference. The drive can be put in to a controlled disable condition by removing the Safe Torque Off signal from terminals 31 & 34 on size 1 to 4 or terminals 31 & 35 on size 5 to 9, setting the *Drive Enable* (06.015) to OFF (0) or disabling the drive via the *Control Word* (06.042) and *Control Word Enable* (06.043).

Pr 41 {05.014} *Control Mode*

There are several voltage modes available which fall into two categories, vector control and fixed boost.

Vector control

Vector control mode provides the motor with a linear voltage characteristic from 0 Hz to *Motor Rated Frequency*, and then a constant voltage above motor rated frequency. When the drive operates between motor rated frequency/50 and motor rated frequency/4, full vector based stator resistance compensation is applied. When the drive operates between motor rated frequency/4 and motor rated frequency/2 the stator resistance compensation is gradually reduced to zero as the frequency increases. For the vector modes to operate correctly the *Motor Rated Power Factor* (Pr **09**), *Stator Resistance* (05.017), *Maximum Deadtime Compensation* (05.059) and current at *Maximum Deadtime Compensation* (05.060) are all required to be set up accurately. The drive can be made to measure these by performing an autotune (see Pr **38** *Autotune*). The drive can also be made to measure the stator resistance automatically every time the drive is enabled or the first time the drive is enabled after it is powered up, by selecting one of the vector control voltage modes.

(0) **Ur.S** = The stator resistance is measured and the parameters for the selected motor map are over-written each time the drive is made to run. This test can only be done with a stationary motor where the flux has decayed to zero. Therefore this mode should only be used if the motor is guaranteed to be stationary each time the drive is made to run. To prevent the test from being done before the flux has decayed there is a period of 1 second after the drive has been in the ready state during which the test is not done if the drive is made to run again. In this case, previously measured values are used. Ur S mode ensures that the drive compensates for any change in motor parameters due to changes in temperature. The new value of stator resistance is not automatically saved to the drive's EEPROM.

(4) **Ur.I** = The stator resistance is measured when the drive is first made to run after each power-up. This test can only be done with a stationary motor. Therefore this mode should only be used if the motor is guaranteed to be stationary the first time the drive is made to run after each power-up. The new value of stator resistance is not automatically saved to the drive's EEPROM.

(1) **Ur** = The stator resistance and voltage offset are not measured. The user can enter the motor and cabling resistance into the *Stator Resistance* (05.017). However this will not include resistance effects within the drive inverter. Therefore if this mode is to be used, it is best to use an autotune test initially to measure the stator resistance.

(3) **Ur.Auto** = The stator resistance is measured once, the first time the drive is made to run. After the test has been completed successfully the *Control Mode* (Pr **41**) is changed to Ur mode. The *Stator Resistance* (05.017) parameter is written to, and along with the *Control Mode* (Pr **41**), are saved in the drive's EEPROM. If the test fails, the voltage mode will stay set to Ur Auto and the test will be repeated next time the drive is made to run.

Fixed boost

The stator resistance is not used in the control of the motor, instead a fixed characteristic with low frequency voltage boost as defined by Pr **42**, is used. Fixed boost mode should be used when the drive is controlling multiple motors. There are three settings of fixed boost available:

(2) **Fixed (Fd)** = This mode provides the motor with a linear voltage characteristic from 0 Hz to *Motor Rated Frequency* (Pr **39**), and then a constant voltage above rated frequency.

(5) **Square (SrE)** = This mode provides the motor with a square law voltage characteristic from 0 Hz to *Motor Rated Frequency* (Pr **39**), and then a constant voltage above rated frequency. This mode is suitable for variable torque applications like fans and pumps where the load is proportional to the square of the speed of the motor shaft. This mode should not be used if a high starting torque is required.

(6) **Fixed Tapered (Fd.tap)** = This mode provides the motor with a linear voltage characteristic with a tapered slip limit.

For mode 2 and 5, at low frequencies (from 0 Hz to ½ x Pr **39**) a voltage boost is applied as defined by Pr **42** as shown below:

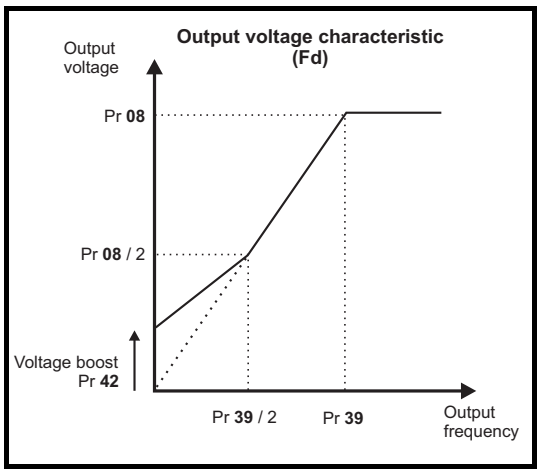

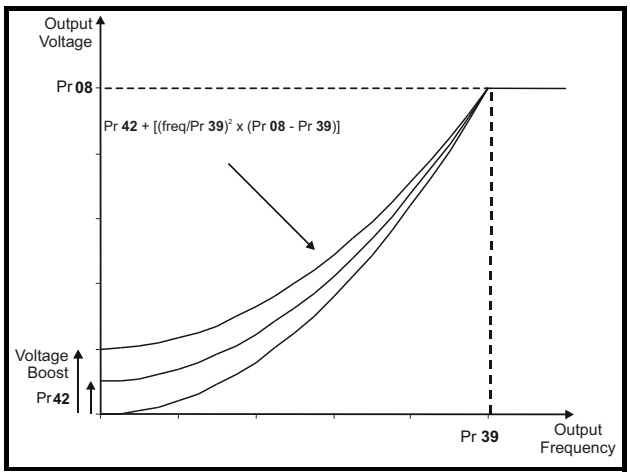

Pr 05.027 ***Enable Slip Compensation***

When a motor, being controlled in open loop mode, has load applied a characteristic of the motor is that the output speed droops in proportion to the load applied as shown:

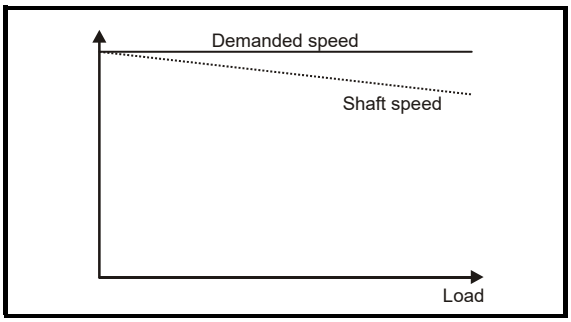

In order to prevent the speed droop shown above slip compensation should be enabled. To enable slip compensation Pr **05.027** must be set to 100 % (this is the default setting), and the motor rated speed must be entered in Pr **07** (Pr **05.008**).

The motor rated speed parameter should be set to the synchronous speed of the motor minus the slip speed. This is normally displayed on the motor nameplate, i.e. for a typical 18.5 kW, 50 Hz, 4 pole motor, the motor rated speed would be approximately 1465 rpm. The synchronous speed for a 50 Hz, 4 pole motor is 1500 rpm, so therefore the slip speed would be 35 rpm. If the synchronous speed is entered in Pr **07**, slip compensation will be disabled. If too small a value is entered in Pr **07**, the motor will run faster than the demanded frequency. The synchronous speeds for 50 Hz motors with different numbers of poles are as follows:

2 pole = 3000 rpm, 4 pole = 1500 rpm, 6 pole =1000 rpm, 8 pole = 750 rpm

8.1.2 RFC-A mode

Pr 06 {05.007} *Motor Rated Current*	**Defines the maximum motor continuous current**

The motor rated current parameter must be set to the maximum continuous current of the motor. The motor rated current is used in the following:

- Current limits (see section 8.3 *Current limits* on page 70, for more information).
- Motor thermal overload protection (see section 8.4 *Motor thermal protection* on page 70, for more information)
- Vector control algorithm

Pr 08 {05.009} *Motor Rated Voltage*	**Defines the voltage applied to the motor at rated frequency**
Pr 39 {05.006} *Motor Rated Frequency*	**Defines the frequency at which rated voltage is applied**

The *Motor Rated Voltage* (Pr **08**) and the *Motor Rated Frequency* (Pr **39**) are used to define the voltage to frequency characteristic applied to the motor (see *Control Mode* (Pr **41**), later in this table). The motor rated frequency is also used in conjunction with the motor rated speed to calculate the rated slip for slip compensation (see *Motor Rated Speed (*Pr **07**), later in this table).

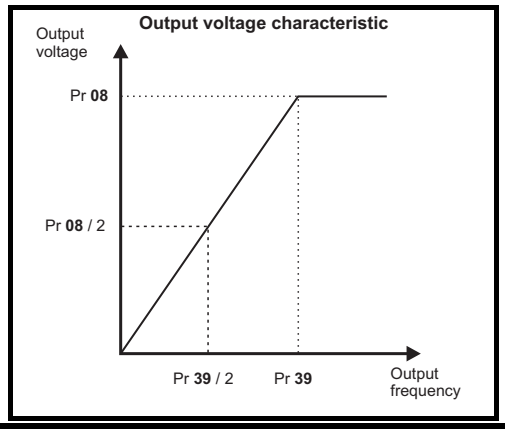

Pr 07 {05.008} *Motor Rated Speed*	**Defines the full load rated speed of the motor and slip**
Pr 40 {05.011} *Number of Motor Poles*	**Defines the number of motor poles**

The motor rated speed and motor rated frequency are used to determine the full load slip of the motor which is used by the vector control algorithm.

Incorrect setting of this parameter has the following effects:

- Reduced efficiency of motor operation
- Reduction of maximum torque available from the motor
- Reduced transient performance
- Inaccurate control of absolute torque in torque control modes

The nameplate value is normally the value for a hot motor; however, some adjustment may be required when the drive is commissioned if the nameplate value is inaccurate. A fixed value can be entered in this parameter.

When Pr **40** is set to 'Auto', the number of motor poles is automatically calculated from the *Motor Rated Frequency* (Pr **39**), and the *Motor Rated Speed* (Pr **07**).

Number of poles = 120 x (Motor *Rated Frequency* (Pr **39** / Motor *Rated Speed* (Pr **07**) rounded to the nearest even number.

Pr 09 {05.010} *Motor Rated Power Factor*	**Defines the angle between the motor voltage and current**

The power factor is the true power factor of the motor, i.e. the angle between the motor voltage and current. If the *Stator Inductance* (05.025) is set to zero then the power factor is used in conjunction with the *Motor Rated Current* (Pr **06**) and other motor parameters to calculate the rated active and magnetising currents of the motor, which are used in the vector control algorithm. If the stator inductance has a non-zero value this parameter is not used by the drive, but is continuously written with a calculated value of power factor. The stator inductance can be measured by the drive by performing a rotating autotune (see *Autotune* (Pr **38**), later in this table).

Pr 38 {05.012} *Autotune*

There are three autotune tests available in RFC-A mode, a stationary test, a rotating test and a mechanical load measurement test. A stationary autotune will give moderate performance whereas a rotating autotune will give improved performance as it measures the actual values of the motor parameters required by the drive. An inertia measurement test should be performed separately to a stationary or rotating autotune.

NOTE

It is highly recommended that a rotating autotune is performed (Pr **38** set to 2).

- A stationary autotune can be used when the motor is loaded and it is not possible to remove the load from the motor shaft. The stationary autotune measures the *Stator Resistance* (05.017) and *Transient Inductance* (05.024) of the motor. These are used to calculate the current loop gains, and at the end of the test the values in Pr **04.013** and Pr **04.014** are updated. A stationary autotune does not measure the power factor of the motor so the value on the motor nameplate must be entered into Pr **09**. To perform a Stationary autotune, set Pr **38** to 1, and provide the drive with both an enable signal (on terminal 31 & 34) and a run signal (on terminal 12 or 13).
- A rotating autotune should only be used if the motor is unloaded. A rotating autotune first performs a stationary autotune, a rotating test is then performed which the motor is accelerated with currently selected ramps up to a frequency of *Motor Rated Frequency* (Pr **39**) x 2/3, and the frequency is maintained at the level for up to 40 s. During the rotating autotune the *Stator Inductance* (05.025), and the motor saturation breakpoints (Pr **05.029**, Pr **05.030**, Pr **05.062** and Pr **05.063**) are modified by the drive. The power factor is also modified for user information only, but is not used after this point as the stator inductance is used in the vector control algorithm instead. To perform a Rotating autotune, set Pr **38** to 2, and provide the drive with both an enable signal (on terminal 31 & 34) and a run signal (on terminal 12 or 13).
- The mechanical load test can measure the total inertia of the load and the motor. A series of progressively larger torque levels are applied to the motor (20 %, 40 % … 100 % of rated torque) to accelerate the motor up to ¾ x Motor Rated Speed (Pr **07**) to determine the inertia from the acceleration/deceleration time. The test attempts to reach the required speed within 5s, but if this fails, the next torque level is used. When 100 % torque is used, the test allows 60 s for the required speed to be reached, but if this is unsuccessful, a tun.1 trip is initiated. To reduce the time taken for the test, it is possible to define the level of torque to be used for the test by setting Mechanical Load Test Level (05.021) to a non-zero value. When the test level is defined, the test is only carried out at the defined test level and 60 s is allowed for the motor to reach the required speed. It should be noted that if the maximum speed allows for flux weakening then it may not be possible to achieve the required torque level to accelerate the motor fast enough. If this is the case, the maximum speed reference should be reduced.
  1. The motor must be stationary at the start of the test.
  2. The motor is accelerated in the required direction up to ¾ of the maximum speed reference and then decelerated to zero speed.
  3. The test is repeated with progressively higher torque until the required speed is reached.

  To perform a mechanical load measurement autotune, set Pr **38** to 3, and provide the drive with both an enable signal (on terminal 31 & 34) and a run signal (on terminal 12 or 13). Following the completion of an autotune test the drive will go into the inhibit state. The drive must be placed into a controlled disable condition before the drive can be made to run at the required reference. The drive can be put in to a controlled disable condition by removing the Safe Torque Off signal from terminal 31 & 34, setting the *Drive Enable* (06.015) to OFF (0) or disabling the drive via the control word (Pr **06.042** & Pr **06.043**).

{04.013} / {04.014} *Current Loop Gains*

The current loop gains proportional (Kp) and integral (Ki) gains control the response of the current loop to a change in current (torque) demand. The default values give satisfactory operation with most motors. However, for optimal performance in dynamic applications it may be necessary to change the gains to improve the performance. The *Current Controller Kp Gain* (04.013) is the most critical value in controlling the performance. The values for the current loop gains can be calculated by performing a stationary or rotating autotune (see *Autotune* Pr **38**, earlier in this table) the drive measures the *Stator Resistance* (05.017) and *Transient Inductance* (05.024) of the motor and calculates the current loop gains.

This will give a step response with minimum overshoot after a step change of current reference. The proportional gain can be increased by a factor of 1.5 giving a similar increase in bandwidth; however, this gives a step response with approximately 12.5 % overshoot. The equation for the integral gain gives a conservative value. In some applications where it is necessary for the reference frame used by the drive to dynamically follow the flux very closely (i.e. high speed Sensorless RFC-A induction motor applications) the integral gain may need to have a significantly higher value.

Frequency Loop Gains
(00.065 {03.010}, Pr 00.066 {03.011}

The frequency loop gains control the response of the frequency controller to a change in frequency demand. The frequency controller includes proportional (Kp) and integral (Ki) feed forward terms, and a differential (Kd) feedback term. The drive holds two sets of these gains and either set may be selected for use by the frequency controller with Pr **03.016**. If Pr **03.016** = 0, gains Kp1, Ki1 and Kd1 (Pr **03.010** to Pr **03.012**) are used, and if Pr **03.016** = 1, gains Kp2, Ki2 and Kd2 (Pr **03.013** to Pr **03.015**) are used. **Pr 03.016** may be changed when the drive is enabled or disabled.

Frequency Controller Proportional Gain (Kp), Pr **65** {03.010} and **Pr 03.013**

If the proportional gain has a value and the integral gain is set to zero the controller will only have a proportional term, and there must be a frequency error to produce a torque reference. Therefore as the motor load increases there will be a difference between the reference and actual frequencies. This effect, called regulation, depends on the level of the proportional gain, the higher the gain the smaller the frequency error for a given load. If the proportional gain is too high either the acoustic noise produced by numerical quantization becomes unacceptable, or the stability limit is reached.

Frequency Controller Integral Gain (Ki), Pr **66** {03.011} and Pr **03.014**

The integral gain is provided to prevent frequency regulation. The error is accumulated over a period of time and used to produce the necessary torque demand without any frequency error. Increasing the integral gain reduces the time taken for the frequency to reach the correct level and increases the stiffness of the system, i.e. it reduces the positional displacement produced by applying a load torque to the motor. Unfortunately increasing the integral gain also reduces the system damping giving overshoot after a transient. For a given integral gain, the damping can be improved by increasing the proportional gain. A compromise must be reached where the system response, stiffness and damping are all adequate for the application. For RFC-A Sensorless mode, it is unlikely that the integral gain can be increased much above 0.50.

Differential Gain (Kd), Pr **03.012** and Pr **03.015**

The differential gain is provided in the feedback of the frequency controller to give additional damping. The differential term is implemented in a way that does not introduce excessive noise normally associated with this type of function. Increasing the differential term reduces the overshoot produced by under-damping, however, for most applications the proportional and integral gains alone are sufficient.

Gain Change Threshold, Pr **03.017**

If the Frequency Controller Gain Select (03.016) = 2, gains Kp1, Ki1 and Kd1 (Pr **03.010** to Pr **03.012**) are used while the modulus of the frequency demand is less than the value held by Gain Change Threshold (03.017), else gains Kp2, Ki2 and Kd2 (Pr **03.013** to Pr **03.015**) will be used.

Tuning the frequency loop gains:

This involves the connecting of an oscilloscope to analog output 1 to monitor the frequency feedback.
Give the drive a step change in frequency reference and monitor the response of the drive on the oscilloscope.
The proportional gain (Kp) should be set up initially. The value should be increased up to the point where the frequency overshoots and then reduced slightly.
The integral gain (Ki) should then be increased up to the point where the frequency becomes unstable and then reduced slightly.
It may now be possible to increase the proportional gain to a higher value and the process should be repeated until the system response approaches the ideal response as shown.
The diagram shows the effect of incorrect P and I gain settings as well as the ideal response.

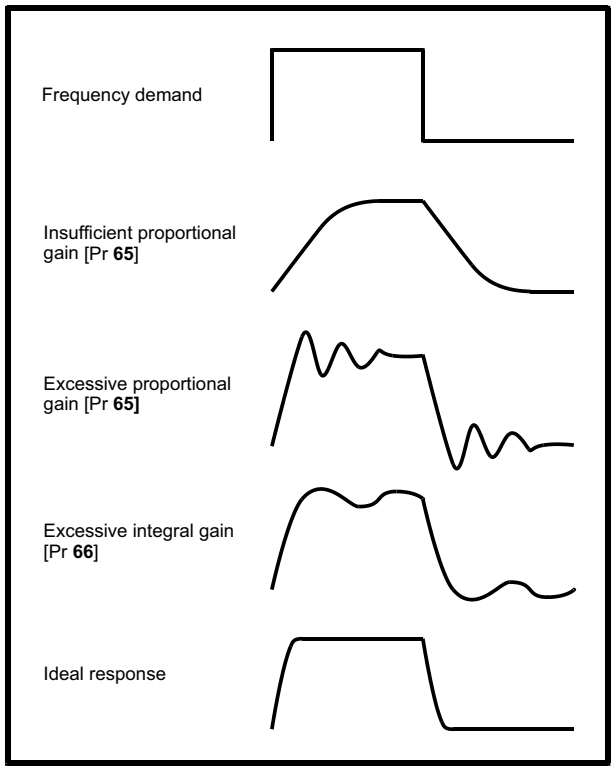

8.2 Maximum motor rated current

Size 1 to 4:

The maximum motor rated current is the *Maximum Heavy Duty Current Rating* (Pr **77**).

The values for the Heavy Duty rating can be found in the *Power Installation Guide*.

Size 5 onwards:

The maximum motor rated current allowed by the drive is greater than the *Maximum Heavy Duty Current Rating* (Pr **77**). The ratio between the Normal Duty rating and the *Maximum Heavy Duty Current Rating* (Pr **77**) varies between drive sizes. The values for the Normal and Heavy Duty rating can be found in the *Power Installation Guide*. If the *Motor Rated Current* (Pr **06**) is set above the *Maximum Heavy Duty Current Rating* (Pr **77**), the current limits and the motor thermal protection scheme are modified (see section 8.3 *Current limits*and section 8.4 *Motor thermal protection*below for further information).

8.3 Current limits

The default setting for the current limit parameters is:

- 165 % x motor rated torque producing current for open loop mode.
- 175 % x motor rated torque producing current for RFC-A mode.

There are three parameters which control the current limits:

- Motoring current limit: power flowing from the drive to the motor
- Regen current limit: power flowing from the motor to the drive
- Symmetrical current limit: current limit for both motoring and regen operation

The lowest of either the motoring and regen current limit, or the symmetrical current limit applies.

The maximum setting of these parameters depends on the values of motor rated current, drive rated current and the power factor.

With size 5 upwards, increasing the motor rated current (Pr **06** / Pr **05.007**) above the Heavy Duty rating (default value), will automatically reduce the current limits in Pr **04.005** to Pr **04.007**. If the motor rated current is then set to or below the Heavy Duty rating, the current limits will be left at their reduced values.

The drive can be oversized to permit a higher current limit setting to provide higher accelerating torque as required up to a maximum of 1000 %.

8.4 Motor thermal protection

A time constant thermal model is provided to estimate the motor temperature as a percentage of its maximum allowed temperature.

The motor thermal protection is modelled using losses in the motor. The losses in the motor are calculated as a percentage value, so that under these conditions the *Motor Protection Accumulator* (04.019) would eventually reach 100 %.

Percentage losses = 100 % x [Load related losses]

Where:

Load related losses = $[I / (K_1 \times I_{Rated})]^2$

Where:

I = *Current Magnitude* (Pr **88**)

I_{Rated} = *Motor Rated Current* (Pr **06**)

If *Motor Rated Current* (Pr **06**) ≤ *Maximum Heavy Duty Current* (Pr **77**)

Figure 8-1 Motor thermal protection (Heavy Duty)

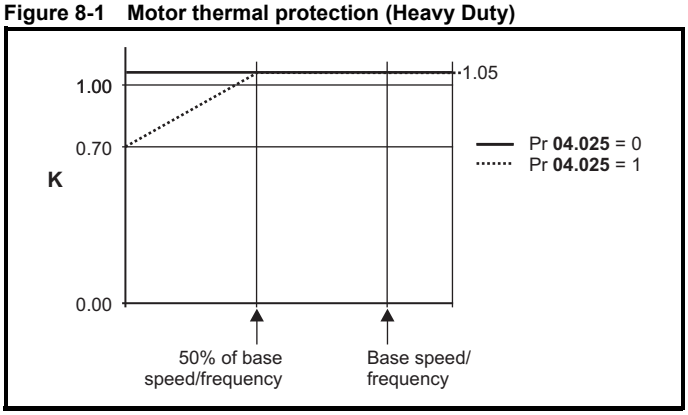

If Pr **04.025** is 0 the characteristic is for a motor which can operate at rated current over the whole speed range. Induction motors with this type of characteristic normally have forced cooling. If Pr **04.025** is 1 the characteristic is intended for motors where the cooling effect of motor fan reduces with reduced motor speed below 50 % of base speed/ frequency. The maximum value for K1 is 1.05, so that above the knee of the characteristics the motor can operate continuously up to 105 % current.

Figure 8-2 Motor thermal protection (Normal Duty)

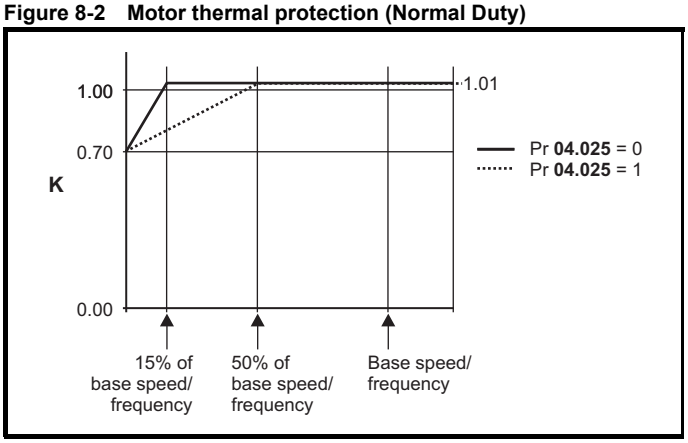

Both settings of Pr **04.025** are intended for motors where the cooling effect of the motor fan reduces with reduced motor speed, but with different speeds below which the cooling effect is reduced. If Pr **04.025** is 0 the characteristic is intended for motors where the cooling effect reduces with motor speed below 15 % of base speed/frequency. If Pr **04.025** is 1 the characteristic is intended for motors where the cooling effect reduces with motor speed below 50 % of base speed/frequency. The maximum value for K1 is 1.01, so that above the knee of the characteristics the motor can operate continuously up to 101 % current.

When the estimated temperature in Pr **04.019** reaches 100 % the drive takes some action depending on the setting of Pr **04.016**. If Pr **04.016** is 0, the drive trips when Pr **04.019** reaches 100 %. If Pr **04.016** is 1, the current limit is reduced to (K - 0.05) x 100 % when Pr **04.019** reaches 100 %.

The current limit is set back to the user defined level when Pr **04.019** falls below 95 %. The thermal model temperature accumulator accumulates the temperature of the motor while the drive remains powered-up. By default, the accumulator is set to the power down value at power up. If the rated current defined by Pr **06** is altered, the accumulator is reset to zero.

The default setting of the thermal time constant (Pr **04.015**) is 179 s which is equivalent to an overload of 150 % for 120 s from cold.

8.5 Switching frequency

The default switching frequency is 3 kHz, however this can be increased up to a maximum of 16 kHz by Pr **37**.

If switching frequency is increased from 3 kHz the following apply:

1. Increased heat loss in the drive, which means that derating to the output current must be applied.
   See the derating tables for switching frequency and ambient temperature in the *Power Installation Guide*.
2. Reduced heating of the motor - due to improved output waveform quality.
3. Reduced acoustic noise generated by the motor.
4. Increased sample rate on the speed and current controllers. A trade off must be made between motor heating, drive heating and the demands of the application with respect to the sample time required.

NOTE

Lowest switching frequency in RFC-A mode is 2 kHz.

Table 8-1 Sample rates for various control tasks at each switching frequency

	0.667 1 kHz	3, 6, 12 kHz	2, 4, 8, 16 kHz	Open loop	RFC-A
Level 1	250 µs	167 µs	2 kHz = 250 µs 4 kHz = 125 µs 8 kHz = 125 µs 16 kHz = 125 µs	Peak limit	Current controllers
Level 2	250 µs			Current limit and ramps	Speed controller and ramps
Level 3	1 ms			Voltage controller	
Level 4	4 ms			Time critical user interface	
Background				Non-time critical user interface	

8.5.1 Field weakening (constant power) operation

The drive can be used to run an induction machine above synchronous speed into the constant power region. The speed continues to increase and the available shaft torque reduces. The characteristics below show the torque and output voltage characteristics as the speed is increased above the rated value.

Figure 8-3 Torque and rated voltage against speed

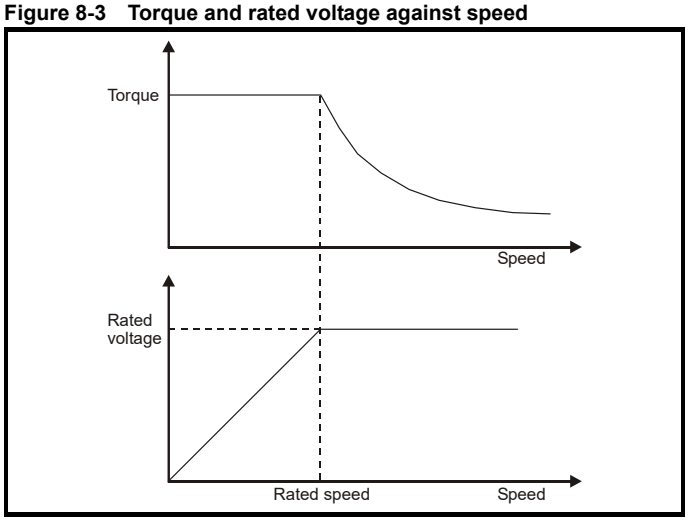

Care must be taken to ensure the torque available above base speed is sufficient for the application to run satisfactorily.

The saturation breakpoint parameters (Pr **05.029**, Pr **05. 030**, Pr **05.062** and Pr **05.063**) found during the autotune in RFC-A mode ensure the magnetizing current is reduced in the correct proportion for the specific motor. (In open loop mode the magnetizing current is not actively controlled).

8.5.2 Maximum frequency

In all operating modes the maximum output frequency is limited to 550 Hz.

8.5.3 Over-modulation (open-loop only)

The maximum output voltage level of the drive is normally limited to an equivalent of the drive input voltage minus voltage drops within the drive (the drive will also retain a few percent of the voltage in order to maintain current control). If the motor rated voltage is set at the same level as the supply voltage, some pulse deletion will occur as the drive output voltage approaches the rated voltage level. If Pr **05.020** (Over-modulation enable) is set to 1 the modulator will allow over modulation, so that as the output frequency increases beyond the rated frequency the voltage continues to increase above the rated voltage.

This can be used for example:

- To obtain high output frequencies with a low switching frequency which would not be possible with space vector modulation limited to unity modulation depth,

or

- In order to maintain a higher output voltage with a low supply voltage.

The disadvantage is that the machine current will be distorted as the modulation depth increases above unity, and will contain a significant amount of low order odd harmonics of the fundamental output frequency. The additional low order harmonics cause increased losses and heating in the motor.

8.5.4 Switching frequency/Output frequency ratio

With a default switching frequency of 3 kHz, the maximum output frequency should be limited to 250 Hz. Ideally, a minimum ratio of 12:1 should be maintained between the switching frequency and the output frequency. This ensures the number of switchings per cycle is sufficient to ensure the output waveform quality is maintained at a minimum level.

8.6 CT Modbus RTU specification

This section describes the adaptation of the MODBUS RTU protocol offered on Control Techniques' products. The portable software class which implements this protocol is also defined.

MODBUS RTU is a master slave system with half-duplex message exchange. The Control Techniques (CT) implementation supports the core function codes to read and write registers. A scheme to map between MODBUS registers and CT parameters is defined. The CT implementation also defines a 32 bit extension to the standard 16 bit register data format.

8.6.1 MODBUS RTU

Physical layer

Attribute	Description
Normal physical layer for multi-drop operation	EIA485 2 wire
Bit stream	Standard UART asynchronous symbols with Non Return to Zero (NRZ)
Symbol	Each symbol consists of:- 1 start bit 8 data bits (transmitted least significant bit first) 2 stop bits*
Baud rates	600, 1200, 2400, 4800, 9600, 19200, 38400, 57600, 76800, 115200

* The drive will accept a packet with 1 or 2 stop bits but will always transmit 2 stop bits

RTU framing

The frame has the following basic format

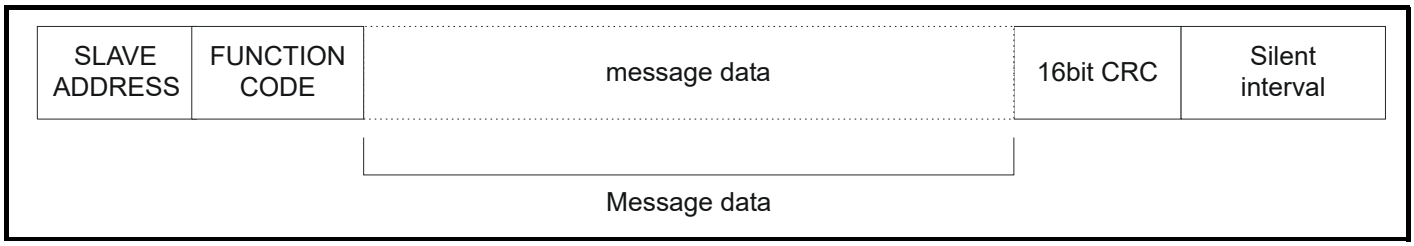

The frame is terminated with a minimum silent period of 3.5 character times (for example, at 19200 baud the minimum silent period is 2 ms). Nodes use the terminating silence period to detect the end of frame and begin frame processing. All frames must therefore be transmitted as a continuous stream without any gaps greater or equal to the silence period. If an erroneous gap is inserted then receiving nodes may start frame processing early in which case the CRC will fail and the frame will be discarded.

MODBUS RTU is a master slave system. All master requests, except broadcast requests, will lead to a response from an individual slave. The slave will respond (i.e. start transmitting the response) within the quoted maximum slave response time (this time is quoted in the data sheet for all Control Techniques products). The minimum slave response time is also quoted but will never be less that the minimum silent period defined by 3.5 character times.

If the master request was a broadcast request then the master may transmit a new request once the maximum slave response time has expired.

The master must implement a message time out to handle transmission errors. This time out period must be set to the maximum slave response time + transmission time for the response.

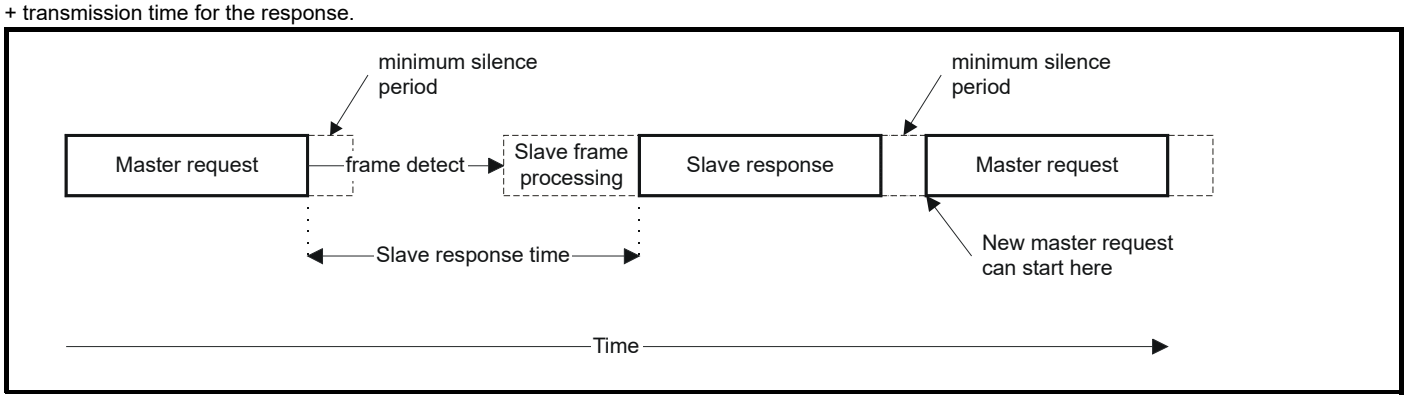

8.6.2 Slave address

The first byte of the frame is the slave node address. Valid slave node addresses are 1 through 247 decimal. In the master request this byte indicates the target slave node; in the slave response this byte indicates the address of the slave sending the response.

Global addressing

Address zero addresses all slave nodes on the network. Slave nodes suppress the response messages for broadcast requests.

8.6.3 MODBUS registers

The MODBUS register address range is 16 bit (65536 registers) which at the protocol level is represented by indexes 0 through 65535.

PLC registers

Modicon PLCs typically define 4 register 'files' each containing 65536 registers. Traditionally, the registers are referenced 1 through 65536 rather than 0 through 65535. The register address is therefore decremented on the master device before passing to the protocol.

File type	Description
1	Read only bits ("coil")
2	Read / write bits ("coil")
3	Read only 16bit register
4	Read / write 16bit register

The register file type code is NOT transmitted by MODBUS and all register files can be considered to map onto a single register address space. However, specific function codes are defined in MODBUS to support access to the "coil" registers.

All standard CT drive parameters are mapped to register file '4' and the coil function codes are not required.

CT parameter mapping

The Modbus register address is 16 bits in size, of which the upper two bits are used for data type selection leaving 14 bits to represent the parameter address, taking into account the slave increments the address value by 1, this results in a theoretical maximum parameter address of 163.84 (limited to 162.99 in software) when the default standard addressing mode (see *Serial Mode* (11.024)) is used.

To access a parameter number above 99 in any drive menu then the modified addressing mode must be used (see *Serial Mode* (11.024)), this will allow access to parameter numbers up to 255 but also limit the maximum menu number to 63.

The Modbus slave device increments the register address by 1 before processing the command, this effectively prevents access to parameter Pr 00.000 in the drive or option module.

The table below shows how the start register address is calculated for both addressing modes.

Parameter	Addressing mode	Protocol register			
0.mm.ppp	Standard	mm x 100 + ppp - 1			
	Modified	mm x 256 + ppp - 1			
Examples					
		16-bit		**32-bit**	
		Decimal	**Hex (0x)**	**Decimal**	**Hex (0x)**
0.01.021	Standard	120	00 78	16504	40 78
	Modified	276	01 14	16660	41 14
0.01.000	Standard	99	00 63	16483	40 63
	Modified	255	00 FF	16639	40 FF
0.03.161	Standard	N/A	N/A	N/A	N/A
	Modified	928	03 A0	17312	43 A0

Data types

The MODBUS protocol specification defines registers as 16 bit signed integers. All CT devices support this data size.

Refer to the section 8.6.7 *Extended data types* on page 75 for detail on accessing 32 bit register data.

8.6.4 Data consistency

All CT devices support a minimum data consistency of one parameter (16 bit or 32 bit data). Some devices support consistency for a complete multiple register transaction.

8.6.5 Data encoding

MODBUS RTU uses a 'big-endian' representation for addresses and data items (except the CRC, which is 'little-endian'). This means that when a numerical quantity larger than a single byte is transmitted, the MOST significant byte is sent first. So for example

16 - bits	0x1234	would be	0x12	0x34		
32 - bits	0x12345678	would be	0x12	0x34	0x56	0x78

8.6.6 Function codes

The function code determines the context and format of the message data. Bit 7 of the function code is used in the slave response to indicate an exception.

The following function codes are supported:

Code	Description
3	Read multiple 16 bit registers
6	Write single register
16	Write multiple 16 bit registers
23	Read and write multiple 16 bit registers

FC03 Read multiple

Read a contiguous array of registers. The slave imposes an upper limit on the number of registers, which can be read. If this is exceeded the slave will issue an exception code 2.

Table 8-2 Master request

Byte	Description
0	Slave destination node address 1 through 247, 0 is global
1	Function code 0x03
2	Start register address MSB
3	Start register address LSB
4	Number of 16 bit registers MSB
5	Number of 16 bit registers LSB
6	CRC LSB
7	CRC MSB

Table 8-3 Slave response

Byte	Description
0	Slave source node address
1	Function code 0x03
2	Length of register data in read block (in bytes)
3	Register data 0 MSB
4	Register data 0 LSB
3+byte count	CRC LSB
4+byte count	CRC MSB

FC06 Write single register

Writes a value to a single 16 bit register. The normal response is an echo of the request, returned after the register contents have been written. The register address can correspond to a 32 bit parameter but only 16 bits of data can be sent.

Table 8-4 Master request

Byte	Description
0	Slave node address 1 through 247, 0 is global
1	Function code 0x06
2	Register address MSB
3	Register address LSB
4	Register data MSB
5	Register data LSB
6	CRC LSB
7	CRC MSB

Table 8-5 Slave response

Byte	Description
0	Slave source node address
1	Function code 0x06
2	Register address MSB
3	Register address LSB
4	Register data MSB
5	Register data LSB
6	CRC LSB
7	CRC MSB

FC16 Write multiple

Writes a contiguous array of registers. The slave imposes an upper limit on the number of registers which can be written. If this is exceeded the slave will discard the request and the master will time out.

Table 8-6 Master request

Byte	Description
0	Slave node address 1 through 247, 0 is global
1	Function code 0x10
2	Start register address MSB
3	Start register address LSB
4	Number of 16 bit registers MSB
5	Number of 16 bit registers LSB
6	Length of register data to write (in bytes)
7	Register data 0 MSB
8	Register data 0 LSB
7+byte count	CRC LSB
8+byte count	CRC MSB

Table 8-7 Slave response

Byte	Description
0	Slave source node address
1	Function code 0x10
2	Start register address MSB
3	Start register address LSB
4	Number of 16 bit registers written MSB
5	Number of 16 bit registers written LSB
6	CRC LSB
7	CRC MSB

FC23 Read/Write multiple

Writes and reads two contiguous arrays of registers. The slave imposes an upper limit on the number of registers which can be written. If this is exceeded the slave will discard the request and the master will time out.

Table 8-8 Master request

Byte	Description
0	Slave node address 1 through 247, 0 is global
1	Function code 0x17
2	Start register address to read MSB
3	Start register address to read LSB
4	Number of 16 bit registers to read MSB
5	Number of 16 bit registers to read LSB
6	Start register address to write MSB
7	Start register address to write LSB
8	Number of 16 bit registers to write MSB
9	Number of 16 bit registers to write LSB
10	Length of register data to write (in bytes)
11	Register data 0 MSB
12	Register data 0 LSB
11+byte count	CRC LSB
12+byte count	CRC MSB

Table 8-9 Slave response

Byte	Description
0	Slave source node address
1	Function code 0x17
2	Length of register data in read block (in bytes)
3	Register data 0 MSB
4	Register data 0 LSB
3+byte count	CRC LSB
4+byte count	CRC MSB

8.6.7 Extended data types

Standard MODBUS registers are 16bit and the standard mapping maps a single #X.Y parameter to a single MODBUS register. To support 32 bit data types (integer and float) the MODBUS multiple read and write services are used to transfer a contiguous array of 16bit registers.

Slave devices typically contain a mixed set of 16 bit and 32 bit registers. To permit the master to select the desired 16 bit or 32 bit access the top two bits of the register address are used to indicate the selected data type.

NOTE

The selection is applied for the whole block access.

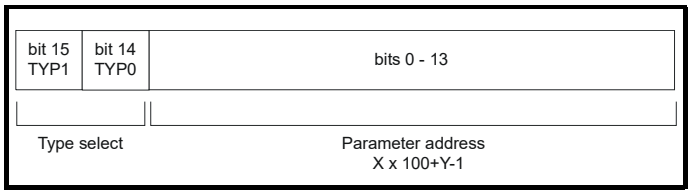

The 2bit type field selects the data type according to the table below:

Type field bits 15-14	Selected data type	Comments
00	INT16	backward compatible
01	INT32	
10	Float32	IEEE754 standard Not supported on all slaves
11	Reserved	

If a 32 bit data type is selected then the slave uses two consecutive 16 bit MODBUS registers (in 'big endian'). The master must also set the correct 'number of 16 bit registers'.

Example, read Pr **20.021** through Pr **20.024** as 32 bit parameters using FC03 from node 8:

Table 8-10 Master request

Byte	Value	Description
0	0x08	Slave destination node address
1	0x03	FC03 multiple read
2	0x47	Start register address Pr **20.021** (16384 + 2021 - 1) = 18404 = 0x47E4
3	0xE4	
4	0x00	Number of 16bit registers to read Pr **20.021** through Pr **20.024** is 4x32 bit registers = 8x16 bit registers
5	0x08	
6	CRC LSB	
7	CRC MSB	

Table 8-11 Slave response

Byte	Value	Description
0	0x08	Slave destination node address
1	0x03	FC03 multiple read
2	0x10	Length of data (bytes) = 4x32 bit registers = 16 bytes
3-6		Pr **20.021** data
7-10		Pr **20.022** data
11-14		Pr **20.023** data
15-18		Pr **20.024** data
19	CRC LSB	
20	CRC MSB	

Reads when actual parameter type is different from selected

The slave will send the least significant word of a 32 bit parameter if that parameter is read as part of a 16 bit access.

The slave will sign extend the least significant word if a 16 bit parameter is accessed as a 32 bit parameter. The number of 16 bit registers must be even during a 32 bit access.

Example, If Pr **01.028** is a 32 bit parameter with a value of 0x12345678, Pr **01.029** is a signed 16 bit parameter with a value of 0xABCD, and Pr **01.030** is a signed 16 bit parameter with a value of 0x0123.

Read	Start register address	Number of 16 bit registers	Response	Comments
Pr **01.028**	127	1	0x5678	Standard 16 bit access to a 32 bit register will return low 16 bit word of truncated data
Pr **01.028**	16511*	2	0x12345678	Full 32 bit access
Pr **01.028**	16511*	1	Exception 2	Number of words must be even for 32 bit access
Pr **01.029**	128	1	0xABCD	Standard 16 bit access to a 32 bit register will return low 16 bit word of data
Pr **01.029**	16512*	2	0xFFFFABCD	32 bit access to a 16 bit register will return 32 bit sign extended data
Pr **01.030**	16513*	2	0x00000123	32 bit access to a 16 bit register will return 32 bit sign extended data
Pr **01.028** **to** Pr **01.029**	127	2	0x5678, 0xABCD	Standard 16 bit access to a 32 bit register will return low 16 bit word of truncated data
Pr **01.028** **to** Pr **01.029**	16511*	4	0x12345678, 0xFFFFABCD	Full 32 bit access

* Bit 14 is set to allow 32 bit access.

Writes when actual parameter type is different from selected

The slave will allow writing a 32 bit value to a 16 bit parameter as long as the 32 bit value is within the normal range of the 16 bit parameter.

The slave will allow a 16 bit write to a 32 bit parameter. The slave will sign extend the written value, therefore the effective range of this type of write will be -32768 to +32767.

Examples, if Pr **01.028** has a range of ±100000, and Pr **01.029** has a range of ±10000.

Write	Start register address	Number of 16 bit registers	Data	Comments
Pr **01.028**	127	1	0x1234	Standard 16 bit write to a 32bit register. Value written = 0x00001234
Pr **01.028**	127	1	0xABCD	Standard 16 bit write to a 32 bit register. Value written = 0xFFFFABCD
Pr **01.028**	16511	2	0x00001234	Value written = 0x00001234
Pr **01.029**	128	1	0x0123	Value written = 0x0123
Pr **01.029**	16512	2	0x00000123	Value written = 0x00000123

* Bit 14 is set to allow 32 bit access

8.6.8 Exceptions

The slave will respond with an exception response if an error is detected in the master request. If a message is corrupted and the frame is not received or the CRC fails then the slave will not issue an exception. In this case the master device will time out. If a write multiple (FC16 or FC23) request exceeds the slave maximum buffer size then the slave will discard the message. No exception will be transmitted in this case and the master will time out.

Exception message format

The slave exception message has the following format.

Byte	Description
0	Slave source node address
1	Original function code with bit 7 set
2	Exception code
3	CRC LSB
4	CRC MSB

Exception codes

The following exception codes are supported.

Code	Description
1	Function code not supported
2	Register address out of range, or request to read too many registers

Parameter over range during block write FC16

The slave processes the write block in the order the data is received. If a write fails due to an out of range value then the write block is terminated. However, the slave does not raise an exception response, rather the error condition is signalled to the master by the number of successful writes field in the response.

Parameter over range during block read/write FC23

There will be no indication that there has been a value out of range during a FC23 access.

8.6.9 CRC

The CRC is a 16bit cyclic redundancy check using the standard CRC-16 polynomial x16 + x15 + x2 + 1. The 16 bit CRC is appended to the message and transmitted LSB first.

The CRC is calculated on ALL the bytes in the frame.

8.6.10 Device compatibility parameters

All devices have the following compatibility parameters defined:

Parameter	Description
Device ID	Unique device identification code
Minimum slave response time	The minimum delay between the end of a message from the master and the time at which the master is ready to receive a response from the slave. Refer to para 11-26
Maximum slave response time	When global addressing, the master must wait for this time before issuing a new message. In a network of devices, the slowest time must be used
Maximum baud rate	
32 bit float data type supported	If this data type is not supported then an over range error will be raised if this data type is used
Maximum buffer size	Determines the maximum block size.

9 NV Media Card

9.1 Introduction

The Non-Volatile Media Card feature enables simple configuration of parameters, parameter back-up and drive cloning using an SD card.

The SD card can be used for:

- Parameter copying between drives
- Saving drive parameter sets

The NV Media Card (SD card) is located in the AI-Backup adaptor.

The card is not hot swappable, but the AI-Backup adaptor is “hot swapped” only when the five unit LEDs on the display are not flashing. The unit LEDs flash during the data transfer.

Figure 9-1 Installation of the SD card

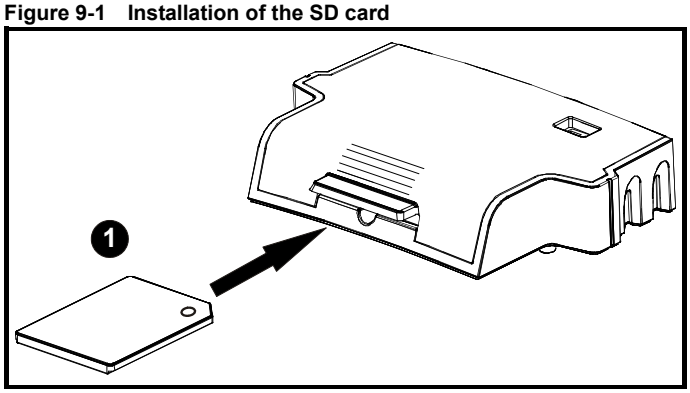

1. Installing the SD card

NOTE

A flat bladed screwdriver or similar tool is required in order to insert / remove the SD card fully into the AI-Backup adaptor.

Before inserting / removing the SD card into / from the AI-Backup adaptor, the AI-Backup adaptor must be removed from the drive.

NOTE

The drive supports SD cards formatted with the FAT32 file system only.

9.2 SD card support

An SD memory card can be inserted in the AI-Backup adaptor in order to transfer data to the drive, however the following limitations should be noted:

If a parameter from the source drive does not exist in the target drive then no data is transferred for that parameter.

If the data for the parameter in the target drive is out of range then the data is limited to the range of the target parameter.

If the target drive has a different rating to the source drive then the normal rules for this type of transfer apply as described later.

No checking is possible to determine if the source and target product types are the same, and so no warning is given if they are different.

If an SD card is used then the drive will recognise the following file types through the drive parameter interface.

File Type	Description
Parameter file	A file that contains all copied user save parameters from the drive menus (1 to 30) in difference from default format
Macro file	The same as a parameter file, but defaults are not loaded before the data is transferred from the card

These files can be created on a card by the drive and then transferred to any other drive including derivatives. If the Drive Derivative (11.028) is different between the source and target drives then the data is transferred but a {C.Pr} trip is initiated.

It is possible for other data to be stored on the card, but this should not be stored in the <MCDF> folder and it will not be visible via the drive parameter interface.

9.2.1 Changing the drive mode

If the source drive mode is different from the target drive mode then the mode will be changed to the source drive mode before the parameters are transferred. If the required drive mode is outside the allowed range for the target then a {C.typ} trip is initiated and no data is transferred.

9.2.2 Different voltage ratings

If the voltage rating of the source and target drives is different then all parameters except those that are rating dependent (i.e. attribute RA=1) are transferred to the target drive. The rating dependent parameters are left at their default values. After the parameters have been transferred and saved to non-volatile memory a {C.rtg} trip is given as a warning. The table below gives a list of the rating dependent parameters.

Parameters
Standard Ramp Voltage (02.008)
Motoring Current Limit (04.005) *M2 Motoring Current Limit* (21.027)
Regenerating Current Limit (04.006) *M2 Regenerating Current Limit* (21.028)
Symmetrical Current Limit (04.007) *M2 Symmetrical Current Limit* (21.029)
User Current Maximum Scaling (04.024)
Motor Rated Current (05.007) *M2 Motor Rated Current* (21.007)
Motor Rated Voltage (05.009) *M2 Motor Rated Voltage* (21.009)
Motor Rated Power Factor (05.010) *M2 Motor Rated Power Factor* (21.010)
Stator Resistance (05.017) *M2 Stator Resistance* (21.012)
Maximum Switching Frequency (05.018)
Transient Inductance /Ld (05.024) *M2 Transient Inductance /Ld* (21.014)
Stator Inductance (05.025) *M2 Stator Inductance* (21.024)
Injection Braking Level (06.006)
Supply Loss Detection Level (06.048)

9.2.3 Different option modules installed

If the option module ID code (15.001) is different for any option module installed to the source drive compared to the destination drive, then the parameters for the set-up for that option module are not transferred, but and are instead set to their default values. After the parameters have been transferred and saved to non-volatile memory, a {C.OPt} trip is given as a warning.

9.2.4 Different current ratings

If any of the current rating parameters (Maximum Heavy Duty Rating (Pr **77**), Maximum Rated Current (11.060) or Full Scale Current Kc (11.061)) are different between the source and target then all parameters are still written to the target drive, but some may be limited by their allowed range. To give similar performance in the target compared to the source drive the frequency and current controller gains are modified as shown below. Note that this does not apply if the file identification number is larger than 500.

Gains	Multiplier
Frequency Controller Proportional Gain Kp1 (03.010)	[Source Full Scale Current Kc (11.061)] /
Frequency Controller Integral Gain Ki1 (03.011)	[Target Full Scale Current Kc (11.061)]
Frequency Controller Proportional Gain Kp2 (03.013)	
Frequency Controller Integral Gain Ki2 (03.014)	
M2 Frequency Controller Proportional Gain Kp (21.017)	
M2 Frequency Controller Integral Gain Ki (21.018)	
Current Controller Kp Gain (04.013)	
Current Controller Ki Gain (04.014)	
M2 Current Controller Kp Gain (21.022)	
M2 Current Controller Ki Gain (21.023)	

9.2.5 Different variable maximums

It should be noted that if ratings of the source and target drives are different, it is possible that some parameters with variable maximums may be limited and not have the same values as in the source drive.

9.2.6 Macro files

Macro files are created in the same way as parameter files except that *NV Media Card Create Special File* (11.072) must be set to 1 before the file is created on the NV media card. *NV Media Card Create Special File* (11.072) is set to zero after the file has been created or the transfer fails. When a macro file is transferred to a drive the drive mode is not changed even if the actual mode is different to that in the file and defaults are not loaded before the parameters are copied from the file to the drive.

The table below gives a summary of the values used in Pr **00** for NV media card operations. The yyy represents the file identification number.

Table 9-1 Functions in Pr 00

Value	Action
2001	Transfer the drive parameters to parameter file 001 and sets the block as bootable. This will include the parameters from any attached option module.
4yyy	Transfer the drive parameters to parameter file yyy. This will include the parameters from any attached option module.
5yyy	Transfer the onboard user program to onboard user program file yyy.
6yyy	Load the drive parameters from parameter file yyy.
7yyy	Erase file yyy.
8yyy	Compare the data in the drive with the file yyy. The data in the drive is compared to the data in the file yyy. If the files are the same then Pr **00** is simply reset to 0 when the compare is complete. If the files are different a {Card Compare} trip is initiated. All other NV media card trips also apply.
9555	Clear the warning suppression flag.
9666	Set the warning suppression flag.
9777	Clear the read-only flag.
9888	Set the read-only flag.
59999*	Delete onboard user program.

* Program cannot be deleted if the drive is active or if the user program is running.

9.2.7 Writing to the NV Media Card

4yyy - Writes defaults differences to the NV Media Card

The data block only contains the parameter differences from the last time default settings were loaded.

All parameters except those with the NC (Not copied) coding bit set are transferred to the NV Media Card. In addition to these parameters all menu 20 parameters (except Pr **20.000**), can be transferred to the NV Media Card.

Writing a parameter set to the NV Media Card (Pr 30 = Prog (2))

Setting Pr **30** to Prog (2) and resetting the drive will save the parameters to the NV Media Card, i.e. this is equivalent to writing 4001 to Pr **00**. All NV Media Card trips apply. If the data block already exists it is automatically overwritten. When the action is complete this parameter is automatically reset to NonE (0).

9.2.8 Reading from the NV Media Card

6yyy - Reading from NV Media Card

When the data is transferred back to the drive, using 6yyy in Pr **00**, it is transferred to the drive RAM and the EEPROM. A parameter save is not required to retain the data after-power down. Set up data for any option module installed stored on the card are transferred to the drive. If the option module installed is different between source and destination drives, the menu for the option module slot where the option module category is different is not updated from the card and will contain its default values after the copying action. The drive will produce a 'C.OPt' trip if the option module installed to the source and the destination drives are different. If the data is being transferred to the drive with different voltage or current rating a 'C.rtg' trip will occur.

The following drive rating dependant parameters (RA coding bit set) will not be transferred to the destination drive by a NV Media Card when the voltage rating of the destination drive is different from the source drive and the file is a parameter file.

However, drive rating dependent parameters will be transferred if only the current rating is different. If drive rating dependant parameters are not transferred to the destination drive they will contain their default values.

Pr **02.008** Standard Ramp Voltage

Pr **04.005** to Pr **04.007** and Pr **21.027** to Pr **21.029** Motoring Current Limits

Pr **04.024**, User Current Maximum Scaling

Pr **04.041** User Over Current Trip Level

Pr **05.007**, Pr **21.007** Rated Current

Pr **05.009**, Pr **21.009** Rated Voltage

Pr **05.010**, Pr **21.010** Rated Power Factor

Pr **05.017**, Pr **21.012** Stator Resistance

Pr **05.018** Maximum Switching Frequency

Pr **05.024**, Pr **21.014** Transient Inductance

Pr **05.025**, Pr **21.024** Stator Inductance

Pr **06.006** Injection Braking Level

Pr **06.048** Supply Loss Detection Level

Pr **06.073** Braking IGBT Lower Threshold

Pr **06.074** Braking IGBT Upper Threshold

Pr **06.075** Low Voltage Braking IGBT Threshold

Reading a parameter set from the NV Media Card (Pr 30 = rEAd (1))

Setting Pr **30** to rEAd (1) and resetting the drive will transfer the parameters from the card into the drive parameter set and the drive EEPROM, i.e. this is equivalent to writing 6001 to Pr **00**.

All NV Media Card trips apply. Once the parameters are successfully copied this parameter is automatically reset to NonE (0). Parameters are saved to the drive EEPROM after this action is complete.

9.2.9 Auto saving parameter changes (Pr 30 = Auto (3))

This setting causes the drive to automatically save any changes made to menu 0 parameters on the drive to the NV Media Card. The latest menu 0 parameter set in the drive is therefore always backed up on the NV Media Card. Changing Pr **30** to Auto (3) and resetting the drive will immediately save the complete parameter set from the drive to the card, i.e. all parameters except parameters with the NC coding bit set. Once the whole parameter set is stored only the individual modified menu 0 parameter setting is updated.

Advanced parameter changes are only saved to the NV Media Card when Pr **00** is set to 'SAVE' or a 1001 and the drive reset.

All NV Media Card trips apply. If the data block already contains information it is automatically overwritten.

If the card is removed when Pr **30** is set to 3, Pr **30** is then automatically set to NonE (0).

When a new NV Media Card is installed Pr **30** must be set back to Auto (3) by the user and the drive reset so the complete parameter set is rewritten to the new NV Media Card if auto mode is still required.

When Pr **30** is set to Auto (3) and the parameters in the drive are saved, the NV Media Card is also updated, and therefore the NV Media Card becomes a copy of the drives stored configuration.

At power up, if Pr **30** is set to Auto (3), the drive will save the complete parameter set to the NV Media Card. The 5 unit LEDs will flash during this operation. This is done to ensure that if a user puts a new NV Media Card in during power down the new NV Media Card will have the correct data.

NOTE

When Pr **30** is set to Auto (3) the setting of Pr **30** itself is saved to the drive EEPROM but not the NV Media Card.

9.2.10 Booting up from the NV Media Card on every power up (Pr 30 = boot (4))

When Pr **30** is set to boot (4) the drive operates the same as Auto mode except when the drive is powered-up. The parameters on the NV Media Card will be automatically transferred to the drive at power up if the following are true:

- A card is inserted in the drive
- Parameter data block 1 exists on the card
- The data in block 1 is type 1 to 4 (as defined in Pr **11.038**)
- Pr **30** on the card set to boot (4)

The 5 unit LEDs will flash during this operation. If the drive mode is different from that on the card, the drive gives a 'C.tyP' trip and the data is not transferred.

If 'boot' mode is stored on the copying NV Media Card this makes the copying NV Media Card the master device. This provides a very fast and efficient way of re-programming a number of drives.

'boot' mode is saved to the card, but when the card is read, the value of Pr **30** is not transferred to the drive.

9.2.11 Booting up from the NV Media Card on every power up (Pr 00 = 2001)

It is possible to create a bootable parameter data block by setting Pr **00** to 2001 and initiating a drive reset. This data block is created in one operation and is not updated when further parameter changes are made.

Setting Pr **00** to 2001 will overwrite the data block 1 on the card if it already exists.

9.2.12 8yyy - Comparing the drive full parameter set with the NV Media Card values

Setting 8yyy in Pr **00**, will compare the NV Media Card file with the data in the drive. If the compare is successful Pr **00** is simply set to 0. If the compare fails a 'C.cPr' trip is initiated.

9.2.13 7yyy - Erasing data from the NV Media Card values

Data can be erased from the NV Media Card either one block at a time or all blocks in one go.

- Setting 7yyy in Pr **00** will erase NV Media Card data block yyy

9.2.14 9666 / 9555 - Setting and clearing the NV Media Card warning suppression flag

If the option module installed to the source and destination drive are different the drive will produce a 'C.OPt' trip.

If the data is being transferred to a drive of a different voltage or current rating a 'C.rtg' trip will occur. It is possible to suppress these trips by setting the warning suppression flag. If this flag is set the drive will not trip if the option module or drive ratings are different between the source and destination drives. The option module or rating dependent parameters will not be transferred.

- Setting 9666 in Pr **00** will set the warning suppression flag
- Setting 9555 in Pr **00** will clear the warning suppression flag

9.2.15 9888 / 9777 - Setting and clearing the NV Media Card read only flag

The NV Media Card may be protected from writing or erasing by setting the read only flag. If an attempt is made to write or erase a data block when the read only flag is set, a 'C.rdo' trip is initiated. When the read only flag is set only codes 6yyy or 9777 are effective.

- Setting 9888 in Pr **00** will set the read only flag
- Setting 9777 in Pr **00** will clear the read only flag

9.3 NV Media Card parameters

Table 9-2 Key to parameter table coding

RW	Read / Write	ND	No default value
RO	Read only	NC	Not copied
Num	Number parameter	PT	Protected parameter
Bit	Bit parameter	RA	Rating dependant
Txt	Text string	US	User save
Bin	Binary parameter	PS	Power-down save
FI	Filtered	DE	Destination

11.036	NV Media Card File Previously Loaded					
RO	Num		NC	PT		
⇳	0 to 999			⇨	0	

This parameter shows the number of the data block last transferred from an SD card to the drive. If defaults are subsequently reloaded this parameter is set to 0.

11.037	NV Media Card File Number					
RW	Num					
⇳	0 to 999			⇨	0	

This parameter should have the data block number which the user would like the information displayed in Pr **11.038**, Pr **11.039**.

11.038	NV Media Card File Type					
RO	Txt	ND	NC	PT		
⇳	0 to 2			⇨	0	

Displays the type of data block selected with Pr **11.037**.

Pr 11.038	String	Type / mode
0	None	No file selected
1	Open-loop	Open loop mode parameter file
2	RFC-A	RFC-A mode parameter file

11.039	NV Media Card File Version					
RO	Num	ND	NC	PT		
⇳	0 to 9999			⇨	0	

Displays the version number of the file selected in Pr **11.037**.

11.042 {30}	Parameter Cloning					
RW	Txt		NC			US
⇳	NonE (0), rEAd (1), Prog (2), Auto (3), boot (4)			⇨	0	

9.4 NV Media Card trips

After an attempt to read, write or erase data from a NV Media Card a trip is initiated if there has been a problem with the command.

See Chapter 12 *Diagnostics* on page 147 for more information on NV Media Card trips.

9.5 Data block header information

Each data block stored on a NV Media Card has header information detailing the following:

- *NV Media Card File Number* (11.037)
- *NV Media Card File Type* (11.038)
- *NV Media Card File Version* (11.039)

The header information for each data block which has been used can be viewed in Pr **11.038** to Pr **11.039** by increasing or decreasing the data block number set in Pr **11.037**. If there is no data on the card Pr **11.037** can only have a value of 0.

10 Onboard PLC

10.1 Onboard PLC and Machine Control Studio

The drive has the ability to store and execute a 30 kB (less 4 kB of proxy) Onboard PLC user program without the need for additional hardware in the form of an option module.

Machine Control Studio is an IEC61131-3 development environment designed for use with Commander and compatible application modules. Machine Control Studio is based on CODESYS from 3S-Smart Software Solutions.

All of the programming languages defined in the IEC standard IEC 61131-3 are supported in the Machine Control Studio development environment.

- ST (Structured text)
- LD (Ladder diagram)
- FBD (Function block diagram)
- IL (Instruction list)
- SFC (Sequential function chart)
- CFC (Continuous Function Chart). CFC is an extension to the standard IEC programming languages

Machine Control Studio provides a complete environment for the development of user programs. Programs can be created, compiled and downloaded to a Commander for execution, via the communications port on the front of the drive. The run-time operation of the compiled program on the target can also be monitored using Machine Control Studio and facilities are provided to interact with the program on the target by setting new values for target variables and parameters.

The Onboard PLC and Machine Control Studio form the first level of functionality in a range of programmable options for Commander.

Machine Control Studio can be downloaded from www.controltechniques.com.

See the Machine Control Studio help file for more information regarding using Machine Control Studio, creating user programs and downloading user programs to the drive.

10.2 Benefits

The combination of the Onboard PLC and Machine Control Studio, means that the drive can replace nano and some micro PLCs in many applications

Machine Control Studio benefits from access to the standard CODESYS function and function block libraries as well as those from third parties. Functions and function blocks available as standard in Machine Control Studio include, but not limited to, the following:

- Arithmetic blocks
- Comparison blocks
- Timers
- Counters
- Multiplexers
- Latches
- Bit manipulation

Typical applications for the Onboard PLC include:

- Ancillary pumps
- Fans and control valves
- Interlocking logic
- Sequence routines
- Custom control words.

10.3 Features

The Commander Onboard PLC user program has the following features:

10.3.1 Tasks

The Onboard PLC allows use of two tasks.

- Clock: A high priority real time task. The clock task interval can be set from 16 ms to 262 s in multiples of 16 ms. The parameter *Onboard User Program: Clock Task Time Used* (11.051) shows the percentage of the available time used by clock task. A read or write of a drive parameter by the user program takes a finite period of time. It is possible to select up to 10 parameters as fast access parameter which reduced the amount of time it takes for the user program to read from or write to a drive parameter. This is useful when using a clock task with a fast update rate as selecting a parameter for fast access reduces the amount of the clock task resource required to access parameters.
- Freewheeling: A non-real time background task. The freewheeling task is scheduled for a short period once every 256 ms. The time for which the task is scheduled will vary depending on the loading of the drive's processor. When scheduled, several scans of the user program may be performed. Some scans may execute in microseconds. However, when the main drive functions are scheduled there will be a pause in the execution of the program causing some scans to take many milliseconds. The parameter *Onboard User Program: Freewheeling Tasks Per Second* (11.050) shows the number of times the freewheeling task has started per second.

10.3.2 Variables

The Onboard PLC supports the use of variables with the data types of Boolean, integer (8 bit, 16 bit and 32 bit, signed and unsigned), floating point (64 bit only), strings and time.

10.3.3 Custom menu

Machine Control Studio can construct a custom drive menu to reside in menu 30 on the drive. The following properties of each parameter can be defined using Machine Control Studio:

- Parameter name
- Number of decimal places
- The units for the parameter to be display on the keypad.
- The minimum, maximum and default values
- Memory handling (i.e. power down save, user save or volatile)
- Data type. The drive provides a limited set of 1 bit, 8 bit, 16 bit and 32 bit integer parameters to create the customer menu.

Parameters in this customer menu can be accessed by the user program and will appear on the keypad.

10.3.4 Limitations

The Onboard PLC user program has the following limitations:

- The flash memory allocated to the Onboard PLC is 30 kB which includes the user program and its header which results in a maximum user program size of about 12 kB
- The Onboard PLC is provided with 2 kB of RAM.
- The drive is rated for 100 program downloads. This limitation is imposed by the flash memory used to store the program within the drive.
- There is only one real-time task with a minimum period of 16 ms.
- The freewheeling background task runs at a low priority. The drive is prioritized to perform the clock task and its major functions first, e.g. motor control, and will use any remaining processing time to execute the freewheeling task as a background activity. As the drive's processor becomes more heavily loaded, less time is spent executing the freewheeling task.
- Breakpoints, single stepping and online program changes are not possible.
- The Graphing tool is not supported.
- The variable data types REAL (32 bit floating point), LWORD (64 bit integer) and WSTRING (Unicode string), and retained variables are not supported.

10.4 Onboard PLC parameters

The following parameters are associated with the Onboard PLC user program.

11.047	Onboard User Program: Enable					
RW	Txt				US	
⇕	Stop (0) or Run (1)			⇨	Run (1)	

This parameter stops and starts the user program.

0 - Stop the User Program

The onboard user program is stopped.

1 - Run the User Program

The user program will execute. Background task starts from the beginning.

11.048	Onboard User Program: Status					
RO	Txt		NC	PT		
⇕	-2147483648 to 2147483647			⇨		

This parameter is read-only and indicates the status of the user program in the drive. The user program writes the value to this parameter.

0: Stopped

1: Running

2: Exception

3: No user program present

11.049	Onboard User Program: Programming Events					
RO	Uni		NC	PT	PS	
⇕	0 to 65535			⇨		

This parameter holds the number of times an Onboard PLC user program download has taken place and is 0 on dispatch from the factory. The drive is rated for one hundred program downloads. This parameter is not altered when defaults are loaded.

11.050	Onboard User Program: Freewheeling Tasks Per Second					
RO	Uni		NC	PT		
⇕	0 to 65535			⇨		

This parameter shows the number of times the freewheeling task has started per second.

11.051	Onboard User Program: Clock Task Time Used					
RO			NC	PT		
⇕	0.0 to 100.0 %			⇨		

This parameter shows the percentage of the available time used by the user program clock task.

11.055	Onboard User Program: Clock Task Scheduled Interval					
RO			NC	PT		
⇕	0 to 262128 ms			⇨		

This parameter shows the interval at which the clock task is scheduled to run at in ms.

10.5 Onboard PLC trips

If the drive detects an error in the user program it will initiate a User Program trip. The sub-trip number for the User Program trip details the reason for the error. See Chapter 12 *Diagnostics* on page 147 for more information on the User Program trip.

11 Advanced parameters

This is a quick reference to all parameters in the drive showing units, ranges limits etc, with block diagrams to illustrate their function. Full descriptions of the parameters can be found in the *Parameter Reference Guide*.

WARNING

These advanced parameters are listed for reference purposes only. The lists in this chapter do not include sufficient information for adjusting these parameters. Incorrect adjustment can affect the safety of the system, and damage the drive and or external equipment. Before attempting to adjust any of these parameters, refer to the *Parameter reference guide*.

Table 11-1 Menu descriptions

Menu	Description
0	Commonly used basic set up parameters for quick / easy programming
1	Frequency reference
2	Ramps
3	Frequency control
4	Torque and current control
5	Motor control
6	Sequencer and clock
7	Analog I/O
8	Digital I/O
9	Programmable logic, motorized pot, binary sum, timers
10	Status and trips
11	Drive set-up and identification, serial communications
12	Threshold detectors and variable selectors
14	User PID controller
15	Option module slot 1 set-up menu
18	General option module application menu 1
20	General option module application menu 2
21	Second motor parameters
22	Menu 0 set-up
24	Option module slot 1 application menu
Slot 1	Slot 1 option menus**

** Only displayed when the option module is installed.

Operation mode abbreviations:

Open-loop: Sensorless control for induction motors

RFC-A: Asynchronous Rotor Flux Control for induction motors

Default abbreviations:

Standard default value (50 Hz AC supply frequency)

USA default value (60 Hz AC supply frequency)

NOTE

Parameter numbers shown in brackets {...} are the equivalent Menu 0 parameters. Some Menu 0 parameters appear twice since their function depends on the operating mode.

In some cases, the function or range of a parameter is affected by the setting of another parameter. The information in the lists relates to the default condition of any parameters affected in this way.

Table 11-2 Key to parameter table coding

Coding	Attribute
RW	Read/Write: can be written by the user
RO	Read only: can only be read by the user
Bit	1 bit parameter. 'On' or 'Off' on the display
Num	Number: can be uni-polar or bi-polar
Txt	Text: the parameter uses text strings instead of numbers.
Bin	Binary parameter
IP	IP Address parameter
Mac	Mac Address parameter
Date	Date parameter
Time	Time parameter
Chr	Character parameter
FI	Filtered: some parameters which can have rapidly changing values are filtered when displayed on the drive keypad for easy viewing.
DE	Destination: This parameter selects the destination of an input or logic function.
RA	Rating dependent: this parameter is likely to have different values and ranges with drives of different voltage and current ratings. Parameters with this attribute will be transferred to the destination drive by non-volatile storage media when the rating of the destination drive is different from the source drive and the file is a parameter file. However, the values will be transferred if only the current rating is different and the file is a difference from default type file.
ND	No default: The parameter is not modified when defaults are loaded
NC	Not copied: not transferred to or from non-volatile media during copying.
PT	Protected: cannot be used as a destination.
US	User save: parameter saved in drive EEPROM when the user initiates a parameter save.
PS	Power-down save: parameter automatically saved in drive EEPROM when the under volts (UV) state occurs.

Table 11-3 Feature look-up table

Features	Related parameters (Pr)												
Acceleration rates	02.010	02.011 to 02.019		02.032	02.033	02.034	02.002						
Analog I/O	Menu 7												
Analog input 1	07.001	07.007	07.008	07.009	07.010	07.028	07.051	07.030	07.061	07.062	07.063	07.064	
Analog input 2	07.002	07.011	07.012	07.013	07.014		07.031	07.052	07.065	07.066	07.067	07.068	
Analog output 1	07.019	07.020			07.055	07.099							
Analog reference 1	01.036	07.010	07.001	07.007	07.008	07.009	07.028	07.051	07.030	07.061	07.062	07.063	07.064
Analog reference 2	01.037	07.014	01.041	07.002	07.011	07.012	07.013	07.032	07.031	07.065	07.066	07.067	07.068
Application menu	Menu 18				Menu 20								
At frequency indicator bit	03.006	03.007	03.009	10.006	10.005	10.007							
Auto reset	10.034	10.035	10.036	10.001									
Autotune	05.012		05.017	05.021	05.024	05.025	05.010	05.029	05.030	05.062	05.063	05.059	05.060
Binary sum	09.029	09.030	09.031	09.032	09.033	09.034							
Bipolar reference	01.010												
Brake control	12.040 to 12.047			12.050	12.051								
Braking	10.011	10.010	10.030	10.031	06.001	02.004	02.002	10.012	10.039	10.040			
Catch a spinning motor	06.009	05.040											
Coast to stop	06.001												
Copying	11.042	11.036 to 11.039											
Cost - per kWh electricity	06.016	06.017	06.024	06.025	06.026		06.027						
Current controller	04.013	04.014											
Current feedback	04.001	04.002	04.017	04.004		04.020		04.024	04.026	10.008	10.009	10.017	
Current limits	04.005	04.006	04.007	04.018	04.015	04.019	04.016	05.007	05.010	10.008	10.009	10.017	
DC bus voltage	05.005	02.008											
DC injection braking	06.006	06.007	06.001										
Deceleration rates	02.020	02.021 to 02.029		02.004	02.035 to 02.037		02.002	02.008	06.001	10.030	10.031	10.039	02.009
Defaults	11.043	11.046											
Digital I/O	Menu 8												
Digital I/O read word	08.020												
Digital I/O T10	08.001	08.011	08.021	08.031	08.081	08.091	08.121						
Digital Input T11	08.002	08.012	08.022		08.082	08.122							
Digital Input T12	08.003	08.013	08.023		08.083	08.123							
Digital input T13	08.004	08.014	08.024	08.084	08.124								
Digital input T14	08.005	08.015	08.025		08.035	08.085	08.125						
Direction	10.013	06.030	06.031	01.003	10.014	02.001	03.002	08.003	08.004	10.040			
Drive active	10.002	10.040											
Drive derivative	11.028												
Drive OK	10.001	08.028	08.008	08.018	10.036	10.040							
Dynamic performance	05.026												
Dynamic V/F	05.013												
Enable	06.015				06.038								
Estimated frequency	03.002	03.003	03.004										
External trip	10.032												
Fan speed	06.045												
Field weakening - induction motor	05.029	05.030	01.006	05.028	05.062	05.063							
Filter change	06.019	06.018	06.021	06.022	06.023								
Firmware version	11.029	11.035											

Features	Related parameters (Pr)												
Frequency controller	03.010 to 03.017												
Frequency reference selection	01.014	01.015											
Frequency slaving	03.001	03.013	03.014	03.015	03.016	03.017	03.018						
Hard frequency reference	03.022	03.023											
Heavy duty rating	05.007	11.032											
High stability space vector modulation	05.019												
I/O sequencer	06.004	06.030	06.031	06.032	06.033	06.034	06.042	06.043	06.041				
Inertia compensation	02.038		04.022	03.018									
Jog reference	01.005	02.019	02.029										
Keypad reference	01.017	01.014	01.043	01.051	06.012	06.013							
Limit switches	06.035	06.036											
Line power supply loss	06.003	10.015	10.016	05.005	06.046	06.048	06.051						
Logic function 1	09.001	09.004	09.005	09.006	09.007	09.008	09.009	09.010					
Logic function 2	09.002	09.014	09.015	09.016	09.017	09.018	09.019	09.020					
Maximum speed	01.006												
Menu 0 set-up				Menu 22									
Minimum speed	01.007	10.004											
Motor map	05.006	05.007	05.008	05.009	05.010	05.011							
Motor map 2	Menu 21		11.045										
Motorized potentiometer	09.021	09.022	09.023	09.024	09.025	09.026	09.027	09.028	09.003				
NV media card	11.036 to 11.039			11.042									
Offset reference	01.004	01.038	01.009										
Open loop vector mode	05.014	05.017	05.088										
Operating mode		11.031		05.014									
Output	05.001	05.002	05.003	05.004									
Over frequency threshold	03.008												
Over modulation enable	05.020												
PID controller	Menu 14												
Power up parameter	11.022												
Preset speeds	01.015	01.021 to 01.028				01.014	01.042	01.045 to 01.047			01.050		
Programmable logic	Menu 9												
Ramp (accel / decel) mode	02.004	02.008	06.001	02.002	02.003	10.030	10.031	10.039					
Reference selection	01.014	01.015	01.049	01.050	01.001								
Regenerating	10.010	10.011	10.030	10.031	06.001	02.004	02.002	10.012	10.039	10.040			
Relay output	08.008	08.018	08.028										
Reset	10.001		10.033	10.034	10.035	10.036	10.038						
RFC mode				05.040									
S ramp	02.006	02.007											
Sample rates	05.018												
Security code	11.030	11.044											
Serial comms	11.023 to 11.027		11.099	11.020									
Skip references	01.029	01.030	01.031	01.032	01.033	01.034	01.035						
Slip compensation	05.027	05.008	05.033	05.036	05.084								
Status word	10.040												
Supply	05.005	06.003	06.046	06.048	06.051	06.058	06.059						
Switching frequency	05.018	05.035	07.034	07.035									

Features	Related parameters (Pr)												
Thermal protection - drive	05.018	05.035	07.004	07.005			07.035	10.018					
Thermal protection - motor	04.015	05.007	04.019	04.016	04.025		08.035						
Thermistor input	07.046	07.047	07.048	07.049	07.050	08.035							
Threshold detector 1	12.001	12.003 to 12.007											
Threshold detector 2	12.002	12.023 to 12.027											
Time - filter change	06.019	06.018	06.021	06.022	06.023								
Time - powered up log	06.020			06.019	06.017	06.018	06.084						
Time - run log				06.019	06.017	06.018	06.084						
Torque	04.003	04.026	05.032										
Torque mode	04.008	04.011											
Trip detection	10.037	10.038	10.020 to 10.029										
Trip log	10.020 to 10.029			10.041 to 10.060				10.070 to 10.079					
Under voltage	05.005	10.016	10.015	10.068									
V/F mode	05.015	05.014											
Variable selector 1	12.008 to 12.016												
Variable selector 2	12.028 to 12.036												
Voltage controller	05.031												
Voltage mode	05.014	05.017		05.015									
Voltage rating	11.033	05.009	05.005										
Voltage supply		06.046	05.005										
Warning	10.019	10.012	10.017	10.018	10.040								
Zero frequency indicator bit	03.005	10.003											

11.1 Parameter ranges and Variable minimum/maximums:

Some parameters in the drive have a variable range with a variable minimum and a variable maximum value which is dependent on one of the following:

- The settings of other parameters
- The drive rating
- The drive mode
- Combination of any of the above

The tables below give the definition of variable minimum/maximum and the maximum range of these.

VM_AC_VOLTAGE	Range applied to parameters showing AC voltage
Units	V
Range of [MIN]	0
Range of [MAX]	0 to 930
Definition	VM_AC_VOLTAGE[MAX] is drive voltage rating dependent. See Table 11-4. VM_AC_VOLTAGE[MIN] = 0

VM_AC_VOLTAGE_SET	Range applied to the AC voltage set-up parameters
Units	V
Range of [MIN]	0
Range of [MAX]	0 to 765
Definition	VM_AC_VOLTAGE_SET[MAX] is drive voltage rating dependent. See Table 11-4. VM_AC_VOLTAGE_SET[MIN] = 0

VM_ACCEL_RATE	Maximum applied to the ramp rate parameters
Units	s / 100 Hz, s/1000 Hz, s/Max Frequency
Range of [MIN]	Open-loop: 0.0 RFC-A: 0.0
Range of [MAX]	Open-loop: 0.0 to 32000.0 RFC-A: 0.0 to 32000.0
Definition	A maximum needs to be applied to the ramp rate parameters because the units are a time for a change of speed from zero to a defined level or to maximum speed. If the change of speed is to the maximum speed then changing the maximum speed changes the actual ramp rate for a given ramp rate parameter value. The variable maximum calculation ensures that longest ramp rate (parameter at its maximum value) is not slower than the rate with the defined level, i.e. 32000.0 s/100 Hz. The maximum frequency is taken from *Maximum Speed* (01.006) if *Select Motor 2 Parameters* (11.045) = 0, or *M2 Maximum Speed* (21.001) if *Select Motor 2 Parameters* (11.045) = 1. VM_ACCEL_RATE[MIN] = 0.0 If Ramp Rate Units (02.039) = 0: VM_ACCEL_RATE[MAX] = 32000.0 Otherwise: VM_ACCEL_RATE[MAX] = 32000.0 x Maximum frequency / 100.00

VM_DC_VOLTAGE	Range applied to DC voltage reference parameters
Units	V
Range of [MIN]	0
Range of [MAX]	0 to 1190
Definition	VM_DC_VOLTAGE[MAX] is the full scale DC bus voltage feedback (over voltage trip level) for the drive. This level is drive voltage rating dependent. See Table 11-4. VM_DC_VOLTAGE[MIN] = 0

VM_DC_VOLTAGE_SET	Range applied to DC voltage reference parameters
Units	V
Range of [MIN]	0
Range of [MAX]	0 to 1150
Definition	VM_DC_VOLTAGE_SET[MAX] is drive voltage rating dependent. See Table 11-4 VM_DC_VOLTAGE_SET[MIN] = 0

VM_DRIVE_CURRENT	Range applied to parameters showing current in A
Units	A
Range of [MIN]	-9999.99 to 0.00
Range of [MAX]	0.00 to 9999.99
Definition	VM_DRIVE_CURRENT[MAX] is equivalent to the full scale (over current trip level) for the drive and is given by *Full Scale Current Kc* (11.061). VM_DRIVE_CURRENT[MIN] = - VM_DRIVE_CURRENT[MAX]

VM_FREQ	Range applied to parameters showing frequency
Units	Hz
Range of [MIN]	-1100.00
Range of [MAX]	1100.00
Definition	This variable minimum/maximum defines the range of speed monitoring parameters. To allow headroom for overshoot the range is set to twice the range of the speed references. VM_FREQ[MIN] = 2 x VM_SPEED_FREQ_REF[MIN] VM_FREQ[MAX] = 2 x VM_SPEED_FREQ_REF[MAX]

VM_MAX_SWITCHING_FREQUENCY	Range applied to the maximum switching frequency parameters
Units	User units
Range of [MIN]	Open-loop: 0 (0.667 kHz) RFC-A: 2 (2 kHz)
Range of [MAX]	Open-loop: 8 (16 kHz) RFC-A: 8 (16 kHz)
Definition	VM_SWITCHING_FREQUENCY[MAX] = Power stage dependent VM_SWITCHING_FREQUENCY[MIN] = 0 This variable maximum is used by the *Minimum Switching Frequency* (05.038) to define the minimum frequency limit used if the inverter thermal model is actively reducing the switching frequency due to temperature. Note that parameter *Maximum Switching Frequency* (05.018) takes priority over parameter *Minimum Switching Frequency* (05.038) so is not limited by parameter *Minimum Switching Frequency* (05.038). The actual minimum switching frequency limit used is the lower of *Maximum Switching Frequency* (05.018) and *Minimum Switching Frequency* (05.038).

VM_MOTOR1_CURRENT_LIMIT	Range applied to current limit parameters (motor 1)
Units	%
Range of [MIN]	0.0
Range of [MAX]	0.0 to 1000.0
Definition	

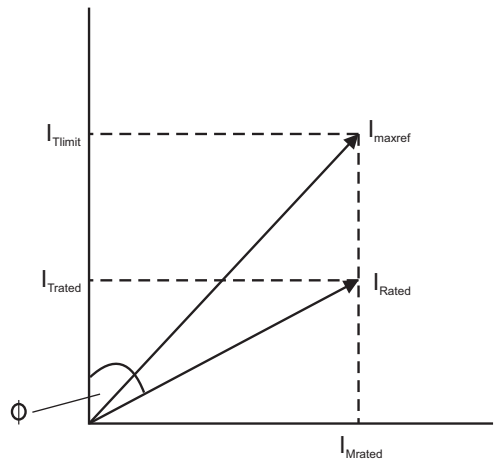

VM_MOTOR1_CURRENT_LIMIT[MAX] is dependent on the drive rating and motor set-up parameters.
VM_MOTOR1_CURRENT_LIMIT[MIN] = 0.0

Open-loop

VM_MOTOR1_CURRENT_LIMIT[MAX] = (I_{Tlimit} / I_{Trated}) x 100 %

Where:

$I_{Tlimit} = I_{MaxRef} \times \cos(\sin^{-1}(I_{Mrated} / I_{MaxRef}))$

I_{Mrated} = Pr **05.007** sin ϕ

I_{Trated} = Pr **05.007** x cos ϕ

cos ϕ = Pr **05.010**

I_{MaxRef} is 0.7 x Pr **11.061** when the motor rated current set in Pr **05.007** is less than or equal to Pr **11.032** (i.e. Heavy duty), otherwise it is the lower of 0.7 x Pr **11.061** or 1.1 x Pr **11.060** (i.e. Normal Duty).

$$\textbf{MOTOR1_CURRENT_LIMIT_MAX} = \frac{\sqrt{\left[\left[\frac{\textbf{Maximum current}}{\textbf{Motor rated current}}\right]^2 + (\textbf{PF})^2 - \textbf{1}\right]}}{\textbf{PF}} \times \textbf{100\%}$$

Where:

Motor rated current is given by Pr **05.007**
PF is motor rated power factor given by Pr **05.010**
(MOTOR2_CURRENT_LIMIT_MAX is calculated from the motor map 2 parameters)
The Maximum current is (1.5 x Rated drive current) when the rated current set by Pr **05.007** is less than or equal to the Maximum Heavy Duty current rating specified in Pr **11.032**, otherwise it is (1.1 x Maximum motor rated current).

For example, with a motor of the same rating as the drive and a power factor of 0.85, the maximum current limit is 165.2%.

The rated active and rated magnetising currents are calculated from the power factor (Pr **05.010**) and motor rated current (Pr **05.007**) as:

rated active current = power factor x motor rated current

rated magnetising current = $\sqrt{(1 - \text{power factor}^2)}$ x motor rated current

RFC-A

VM_MOTOR1_CURRENT_LIMIT[MAX] = (I_{Tlimit} / I_{Trated}) x 100 %

Where:

$I_{Tlimit} = I_{MaxRef} \times \cos(\sin^{-1}(I_{Mrated} / I_{MaxRef}))$

I_{Mrated} = Pr **05.007** x sin ϕ_1

I_{Trated} = Pr **05.007** x cos ϕ_1

$\phi_1 = \cos^{-1}$ (Pr **05.010**) + ϕ_2. ϕ_1 is calculated during an autotune. See the variable minimum / maximum calculations in the *Parameter Reference Guide* for more information regarding ϕ_2.

I_{MaxRef} is 0.9 x Pr **11.061** when the motor rated current set in Pr **05.007** is less than or equal to Pr **11.032** (i.e. Heavy duty), otherwise it is the lower of 0.9 x Pr **11.061** or 1.1 x Pr **11.060** (i.e. Normal Duty).

VM_MOTOR2_CURRENT_LIMIT	Range applied to current limit parameters (motor 2)
Units	%
Range of [MIN]	0.0
Range of [MAX]	0.0 to 1000.0
Definition	VM_MOTOR2_CURRENT_LIMIT[MAX] is dependent on the drive rating and motor set-up parameters. VM_MOTOR2_CURRENT_LIMIT[MIN] = 0.0 Refer to VM_MOTOR1_CURRENT_LIMIT for more information. For VM_MOTOR2_CURRENT_LIMIT[MAX] use Pr **21.007** instead of Pr **05.007** and Pr **21.010** instead of Pr **05.010**.

VM_NEGATIVE_REF_CLAMP1	Limits applied to the negative frequency clamp (motor 1)
Units	Hz
Range of [MIN]	-550.00 to 0.00
Range of [MAX]	0.00 to 550.00
Definition	This variable maximum/minimum defines the range of the negative frequency clamp associated with motor map 1 (*Minimum Speed* (01.007)). The minimum and maximum are affected by the settings of the *Negative Reference Clamp Enable* (01.008), *Bipolar Reference Enable* (01.010) and *Maximum Speed* (01.006) as shown in the table below.

***Negative Reference Clamp Enable* (01.008)**	***Bipolar Reference Enable* (01.010)**	**VM_NEGATIVE_REF_ CLAMP1[MIN]**	**VM_NEGATIVE_REF_ CLAMP1[MAX]**
0	0	0.00	Pr **01.006**
0	1	0.00	0.00
1	X	-VM_POSITIVE_REF_CLAMP[MAX]	0.00

VM_NEGATIVE_REF_CLAMP2	Limits applied to the negative frequency clamp (motor 2)
Units	Hz
Range of [MIN]	-550.00 to 0.00
Range of [MAX]	0.00 to 550.00
Definition	This variable maximum/minimum defines the range of the negative frequency clamp associated with motor map 2 (*M2 Minimum Speed* (21.002)). It is defined in the same way as VM_NEGATIVE_REF_CLAMP1 except that the *M2 Maximum Speed* (21.001) is used instead of *Maximum Speed* (01.006).

VM_POSITIVE_REF_CLAMP	Limits applied to the positive frequency reference clamp
Units	Hz
Range of [MIN]	0.00
Range of [MAX]	550.00
Definition	VM_POSITIVE_REF_CLAMP[MAX] defines the range of the positive reference clamp, *Maximum Speed* (01.006), which in turn limit the references.

VM_POWER	Range applied to parameters that either set or display power
Units	kW
Range of [MIN]	-9999.99 to 0.00
Range of [MAX]	0.00 to 9999.99
Definition	VM_POWER[MAX] is rating dependent and is chosen to allow for the maximum power that can be output by the drive with maximum AC output voltage, at maximum controlled current and unity power factor. VM_POWER[MAX] = √3 x VM_AC_VOLTAGE[MAX] x VM_DRIVE_CURRENT[MAX] / 1000 VM_POWER[MIN] = -VM_POWER[MAX]

VM_RATED_CURRENT	Range applied to rated current parameters
Units	A
Range of [MIN]	0.00
Range of [MAX]	0.00 to 9999.99
Definition	VM_RATED_CURRENT [MAX] = *Maximum Rated Current* (11.060) and is dependent on the drive rating. VM_RATED_CURRENT [MIN] = 0.00

VM_SPEED_FREQ_REF	Range applied to the frequency reference parameters
Units	Hz
Range of [MIN]	-550.00 to 0.00
Range of [MAX]	0.00 to 550.00
Definition	This variable minimum/maximum is applied throughout the frequency and speed reference system so that the references can vary in the range from the minimum to maximum clamps.

***Negative Reference Clamp Enable* (01.008)**	**VM_SPEED_FREQ_REF[MAX] if *Select Motor 2 Parameters* (11.045) = 0**	**VM_SPEED_FREQ_REF[MAX] if *Select Motor 2 Parameters* (11.045) = 1**
0	*Maximum Speed* (01.006)	*M2 Maximum Speed* (21.001)
1	*Maximum Speed* (01.006) or |*Minimum Speed* (01.007)| whichever the larger	*M2 Maximum Speed* (21.001) or |M2 *Minimum Speed* (21.002)| whichever the larger

VM_SPEED_FREQ_REF[MIN] = -VM_SPEED_FREQ_REF[MAX].

VM_SPEED_FREQ_REF_UNIPOLAR	Unipolar version of VM_SPEED_FREQ_REF
Units	Hz
Range of [MIN]	0.00
Range of [MAX]	0.00 to 550.00
Definition	VM_SPEED_FREQ_REF_UNIPOLAR[MAX] = VM_SPEED_FREQ_REF[MAX] VM_SPEED_FREQ_REF_UNIPOLAR[MIN] = 0.00

VM_SPEED_FREQ_USER_REFS	Range applied to analog reference parameters
Units	Hz
Range of [MIN]	-550.00 to 550.00
Range of [MAX]	0.00 to 550.00
Definition	This variable maximum is applied to *Analog Reference 1* (01.036), *Analog Reference 2* (01.037) and *Keypad Reference* (01.017). The maximum applied to these parameters is the same as other frequency reference parameters. VM_SPEED_FREQ_USER_REFS [MAX] = VM_SPEED_FREQ_REF[MAX] However the minimum is dependent on *Negative Reference Clamp Enable* (01.008) and *Bipolar Reference Enable* (01.010).

***Negative Reference Clamp Enable* (01.008)**	***Bipolar Reference Enable* (01.010)**	**VM_SPEED_FREQ_USER_REFS[MIN]**
0	0	If *Select Motor 2 Parameters* (11.045) = 0 *Minimum Speed* (01.007), otherwise *M2 Minimum Speed* (21.002)
0	1	-VM_SPEED_FREQ_REF[MAX]
1	0	0.00
1	1	-VM_SPEED_FREQ_REF[MAX]

VM_SUPPLY_LOSS_LEVEL	Range applied to the supply loss threshold
Units	V
Range of [MIN]	0 to 1150
Range of [MAX]	0 to 1150
Definition	VM_SUPPLY_LOSS_LEVEL[MAX] = VM_DC_VOLTAGE_SET[MAX] VM_SUPPLY_LOSS_LEVEL[MIN] is drive voltage rating dependent. See Table 11-4

VM_TORQUE_CURRENT	Range applied to torque and torque producing current parameters
Units	%
Range of [MIN]	-1000.0 to 0.0
Range of [MAX]	0.0 to 1000.0
Definition	

***Select Motor 2 Parameters* (11.045)**	**VM_TORQUE_CURRENT[MAX]**
0	VM_MOTOR1_CURRENT_LIMIT[MAX]
1	VM_MOTOR2_CURRENT_LIMIT[MAX]

VM_TORQUE_CURRENT[MIN] = -VM_TORQUE_CURRENT[MAX]

VM_TORQUE_CURRENT_UNIPOLAR	Unipolar version of VM_TORQUE_CURRENT
Units	%
Range of [MIN]	0.0
Range of [MAX]	0.0 to 1000.0
Definition	VM_TORQUE_CURRENT_UNIPOLAR[MAX] = VM_TORQUE_CURRENT[MAX] VM_TORQUE_CURRENT_UNIPOLAR[MIN] =0.0 *User Current Maximum Scaling* (04.024) defines the variable maximum/minimums VM_USER_CURRENT which is applied to *Percentage Load* (04.020) and *Torque Reference* (04.008). This is useful when routing these parameters to an analog output as it allows the full scale output value to be defined by the user. This maximum is subject to a limit of MOTOR1_CURRENT_LIMIT or MOTOR2_CURRENT_LIMIT depending on which motor map is currently active. The maximum value (VM_TORQUE_CURRENT_UNIPOLAR [MAX]) varies between drive sizes with default parameters loaded. For some drive sizes the default value may be reduced below the value given by the parameter range limiting.

VM_USER_CURRENT	Range applied to torque reference and percentage load parameters with one decimal place
Units	%
Range of [MIN]	-1000.0 to 0.0
Range of [MAX]	0.0 to 1000.0
Definition	VM_USER_CURRENT[MAX] = *User Current Maximum Scaling* (04.024) VM_USER_CURRENT[MIN] = -VM_USER_CURRENT[MAX] *User Current Maximum Scaling* (04.024) defines the variable maximum/minimums VM_USER_CURRENT which is applied to *Percentage Load* (04.020) and *Torque Reference* (04.008). This is useful when routing these parameters to an analog output as it allows the full scale output value to be defined by the user. This maximum is subject to a limit of MOTOR1_CURRENT_LIMIT or MOTOR2_CURRENT_LIMIT depending on which motor map is currently active. The maximum value (VM_TORQUE_CURRENT_UNIPOLAR [MAX]) varies between drive sizes with default parameters loaded. For some drive sizes the default value may be reduced below the value given by the parameter range limiting.

Table 11-4 Voltage ratings dependant values

Variable min/max	**Voltage level**			
	100 V	**200 V**	**400 V**	**575 V**
VM_DC_VOLTAGE_SET(MAX]	400		800	955
VM_DC_VOLTAGE(MAX] Frame 1 to 4	510		870	N/A
VM_DC_VOLTAGE(MAX] Frame 5 to 9	415		830	990
VM_AC_VOLTAGE_SET(MAX] Frame 1 to 4	240		480	N/A
VM_AC_VOLTAGE_SET(MAX] Frame 5 to 9	265		530	635
VM_AC_VOLTAGE[MAX]	325		650	780
VM_STD_UNDER_VOLTS[MIN]	175		330	435
VM_SUPPLY_LOSS_LEVEL{MIN]	205		410	540

11.2 Menu 1: Frequency reference

Figure 11-1 Menu 1 logic diagram

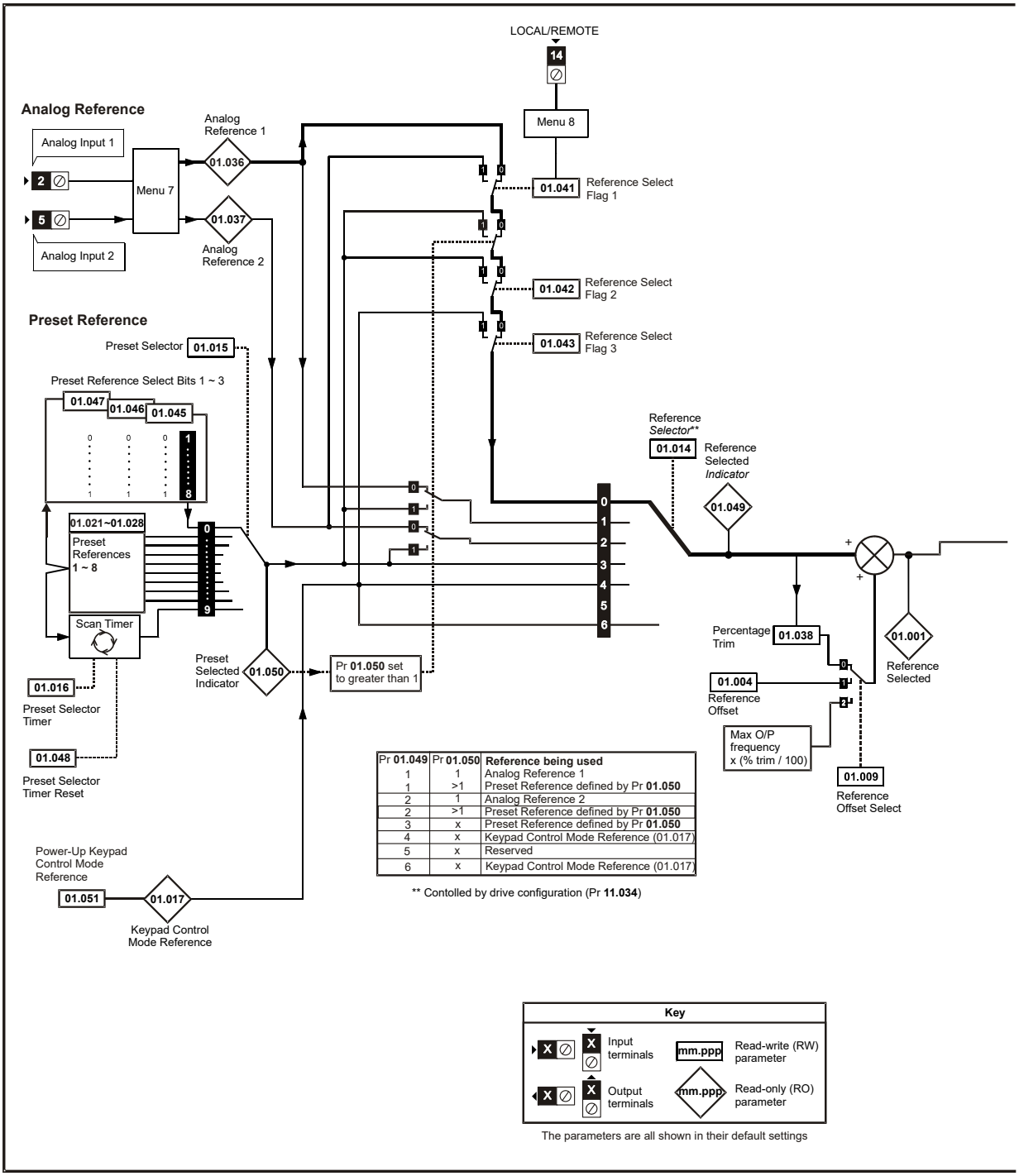

Pr **01.049**	Pr **01.050**	**Reference being used**
1	1	Analog Reference 1
1	>1	Preset Reference defined by Pr **01.050**
2	1	Analog Reference 2
2	>1	Preset Reference defined by Pr **01.050**
3	x	Preset Reference defined by Pr **01.050**
4	x	Keypad Control Mode Reference (01.017)
5	x	Reserved
6	x	Keypad Control Mode Reference (01.017)

** Contolled by drive configuration (Pr **11.034**)

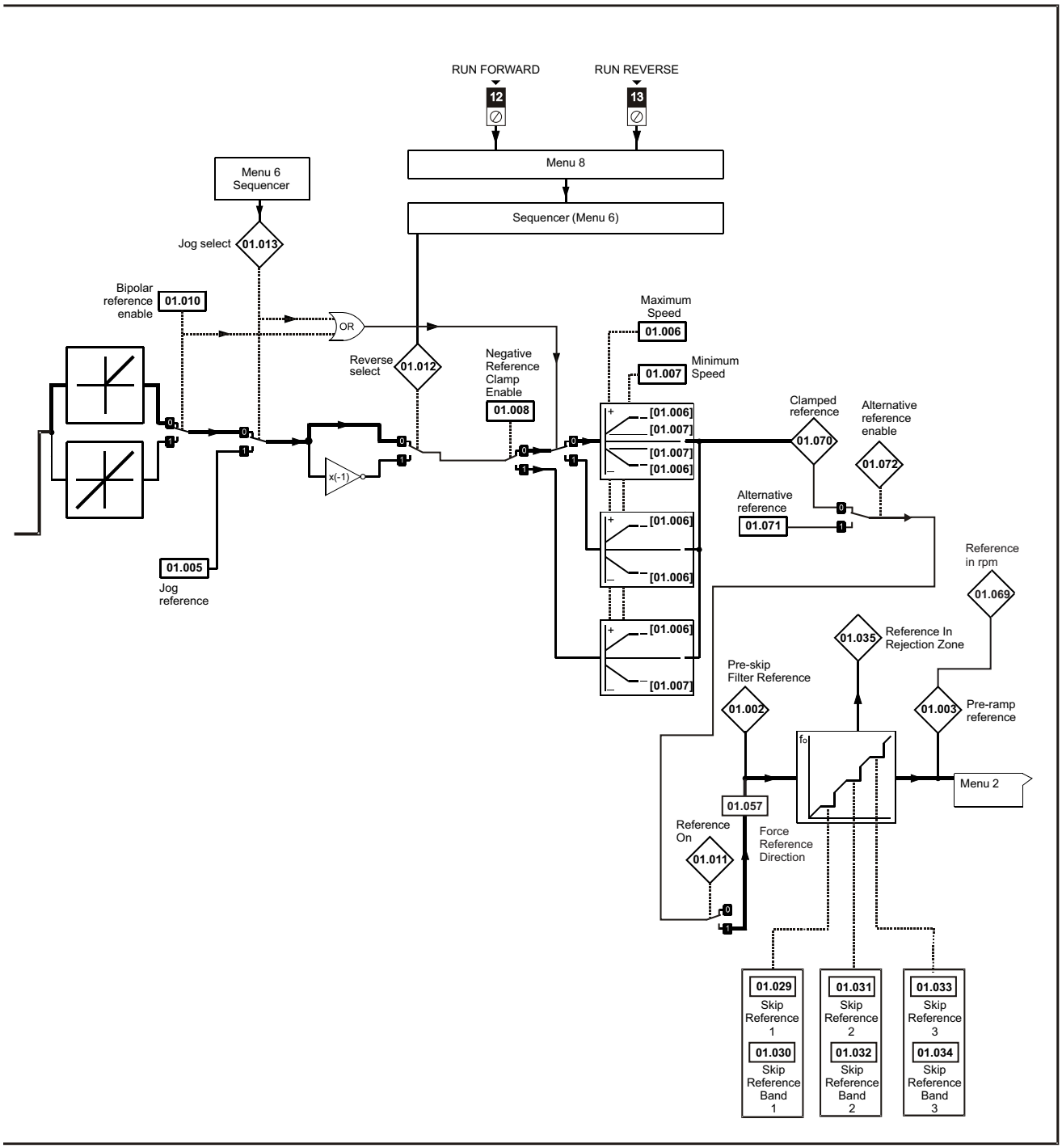
RUN FORWARD
12
RUN REVERSE
13
Menu 8
Sequencer (Menu 6)
Menu 6 Sequencer
Jog select
01.013
Bipolar reference enable
01.010
OR
Reverse select
01.012
Negative Reference Clamp Enable
01.008
Maximum Speed
01.006
Minimum Speed
01.007
[01.006]
[01.007]
[01.007]
[01.006]
[01.006]
[01.006]
[01.006]
[01.006]
[01.007]
x(-1)
01.005
Jog reference
Clamped reference
01.070
Alternative reference enable
01.072
Alternative reference
01.071
Reference in rpm
01.069
01.035
Reference In Rejection Zone
Pre-skip Filter Reference
01.002
01.003
Pre-ramp reference
Menu 2
01.057
Reference On
01.011
Force Reference Direction
01.029
Skip Reference 1
01.030
Skip Reference Band 1
01.031
Skip Reference 2
01.032
Skip Reference Band 2
01.033
Skip Reference 3
01.034
Skip Reference Band 3

Parameter		Range (⇕)		Default (⇨)		Type					
		OL	RFC-A	OL	RFC-A						
01.001	Reference Selected	0.00 to Pr **01.006** Hz				RO	Num	ND	NC	PT	
01.002	Pre-skip Filter Reference	0.00 to Pr **01.006** Hz				RO	Num	ND	NC	PT	
01.003	Pre-ramp Reference	0.00 to Pr **01.006** Hz				RO	Num	ND	NC	PT	
01.004	Reference Offset	0.00 to Pr **01.006** Hz		0.00 Hz		RW	Num				US
01.005	Jog Reference	0.00 to 300.00 Hz		1.50 Hz		RW	Num				US
01.006	Maximum Speed	0.00 to 550.00 Hz		50Hz: 50.00 Hz 60Hz: 60.00 Hz		RW	Num				US
01.007	Minimum Speed	0.00 to Pr **01.006** Hz		0.00 Hz		RW	Num				US
01.008	Negative Reference Clamp Enable	Off (0) or On (1)		Off (0)		RW	Bit				US
01.009	Reference Offset Select	0 to 2		0		RW	Num				US
01.010	Bipolar Reference Enable	Off (0) or On (1)		Off (0)		RW	Bit				US
01.011	Reference On	Off (0) or On (1)				RO	Bit	ND	NC	PT	
01.012	Reverse Select	Off (0) or On (1)				RO	Bit	ND	NC	PT	
01.013	Jog Select	Off (0) or On (1)				RO	Bit	ND	NC	PT	
01.014	Reference Selector	A1.A2 (0), A1.Pr (1), A2.Pr (2), PrESEt (3), PAd (4), rES (5), PAd.rEF (6)		A1.A2 (0)		RW	Txt				US
01.015	Preset Selector	0 to 9		0		RW	Num				US
01.016	Preset Selector Timer	0 to 400.0 s		10.0 s		RW	Num				US
01.017	Keypad Control Mode Reference	VM_SPEED_FREQ_USER_REFS Hz		0.00 Hz		RO	Num		NC	PT	PS
01.021	Preset Reference 1	0.00 to Pr **01.006** Hz		0.00 Hz		RW	Num				US
01.022	Preset Reference 2	0.00 to Pr **01.006** Hz		0.00 Hz		RW	Num				US
01.023	Preset Reference 3	0.00 to Pr **01.006** Hz		0.00 Hz		RW	Num				US
01.024	Preset Reference 4	0.00 to Pr **01.006** Hz		0.00 Hz		RW	Num				US
01.025	Preset Reference 5	0.00 to Pr **01.006** Hz		0.00 Hz		RW	Num				US
01.026	Preset Reference 6	0.00 to Pr **01.006** Hz		0.00 Hz		RW	Num				US
01.027	Preset Reference 7	0.00 to Pr **01.006** Hz		0.00 Hz		RW	Num				US
01.028	Preset Reference 8	0.00 to Pr **01.006** Hz		0.00 Hz		RW	Num				US
01.029	Skip Reference 1	0.00 to 550.00 Hz		0.00 Hz		RW	Num				US
01.030	Skip Reference Band 1	0.00 to 25.00 Hz		0.50 Hz		RW	Num				US
01.031	Skip Reference 2	0.00 to 550.00 Hz		0.00 Hz		RW	Num				US
01.032	Skip Reference Band 2	0.00 to 25.00 Hz		0.50 Hz		RW	Num				US
01.033	Skip Reference 3	0.00 to 550.00 Hz		0.00 Hz		RW	Num				US
01.034	Skip Reference Band 3	0.00 to 25.00 Hz		0.50 Hz		RW	Num				US
01.035	Reference In Rejection Zone	Off (0) or On (1)				RO	Bit	ND	NC	PT	
01.036	Analog Reference 1	VM_SPEED_FREQ_USER_REFS Hz		0.00 Hz		RO	Num		NC		
01.037	Analog Reference 2	VM_SPEED_FREQ_USER_REFS Hz		0.00 Hz		RO	Num		NC		
01.038	Percentage Trim	± 100.00 %		0.00 %		RW	Num		NC		
01.041	Reference Select Flag 1	Off (0) or On (1)		Off (0)		RW	Bit		NC		
01.042	Reference Select Flag 2	Off (0) or On (1)		Off (0)		RW	Bit		NC		
01.043	Reference Select Flag 3	Off (0) or On (1)		Off (0)		RW	Bit		NC		
01.045	Preset Select Flag 1	Off (0) or On (1)		Off (0)		RW	Bit		NC		
01.046	Preset Select Flag 2	Off (0) or On (1)		Off (0)		RW	Bit		NC		
01.047	Preset Select Flag 3	Off (0) or On (1)		Off (0)		RW	Bit		NC		
01.048	Preset Selector Timer Reset	Off (0) or On (1)		Off (0)		RW	Bit		NC		
01.049	Reference Selected Indicator	1 to 6				RO	Num	ND	NC	PT	
01.050	Preset Selected Indicator	1 to 8				RO	Num	ND	NC	PT	
01.051	Power-up Keypad Control Mode Reference	rESEt (0), LASt (1), PrESEt (2)		rESEt (0)		RW	Txt				US
01.057	Force Reference Direction	NonE (0), For (1), rEv (2)		NonE (0)		RW	Txt				
01.069	Reference in rpm	± 33000.0 rpm				RO	Num	ND	NC	PT	
01.070	Clamped Reference	0.00 to Pr **01.006** Hz				RO	Num	ND	NC	PT	
01.071	Alternative Reference	0.00 to Pr **01.006** Hz		0.00 Hz		RW	Num		NC	PT	
01.072	Alternative Reference Enable	Off (0) or On (1)				RO	Bit	ND	NC	PT	

RW	Read / Write	RO	Read only	Num	Number parameter	Bit	Bit parameter	Txt	Text string	Bin	Binary parameter	FI	Filtered
ND	No default value	NC	Not copied	PT	Protected parameter	RA	Rating dependent	US	User save	PS	Power-down save	DE	Destination

11.3 Menu 2: Ramps

Figure 11-2 Menu 2 logic diagram

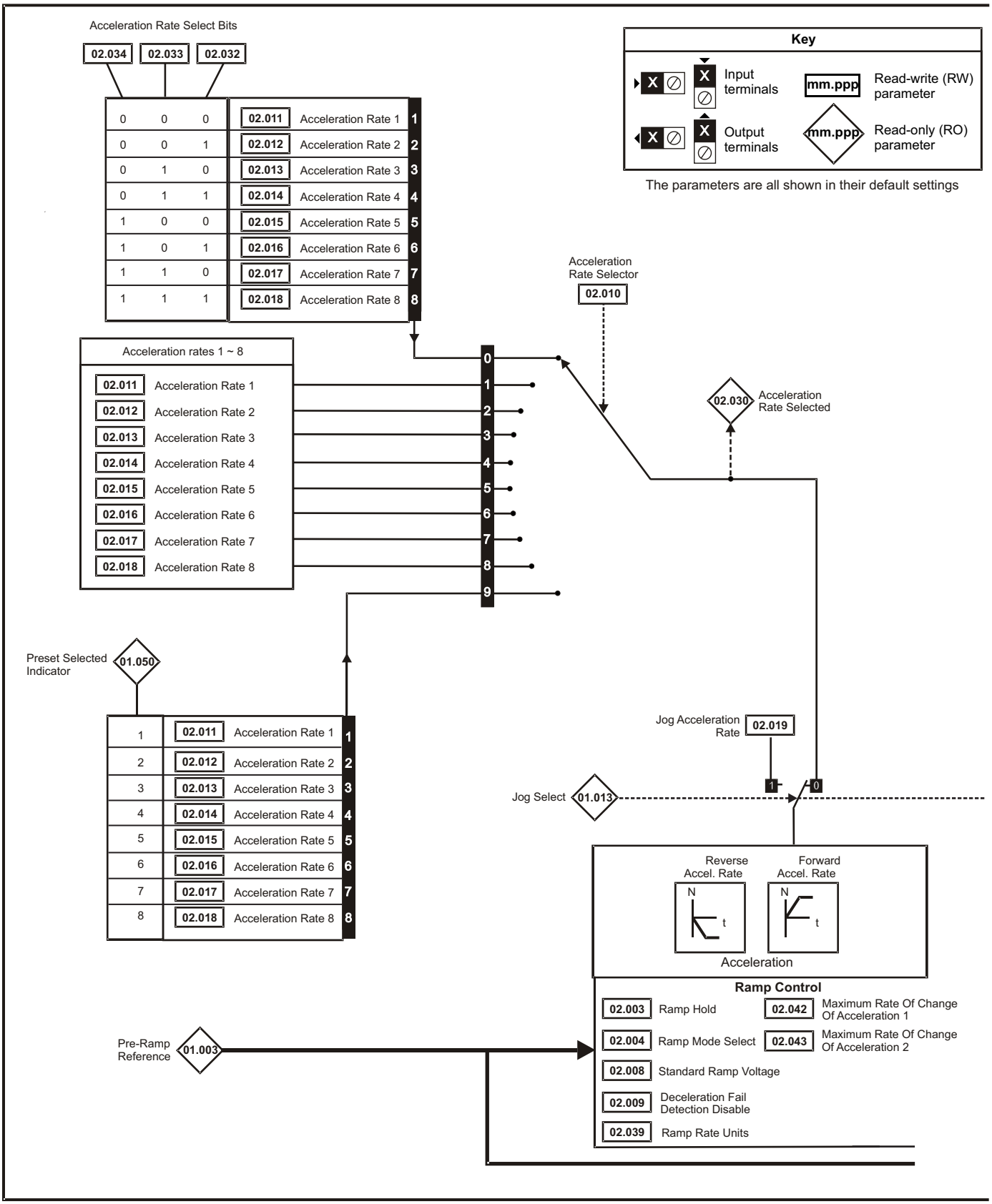

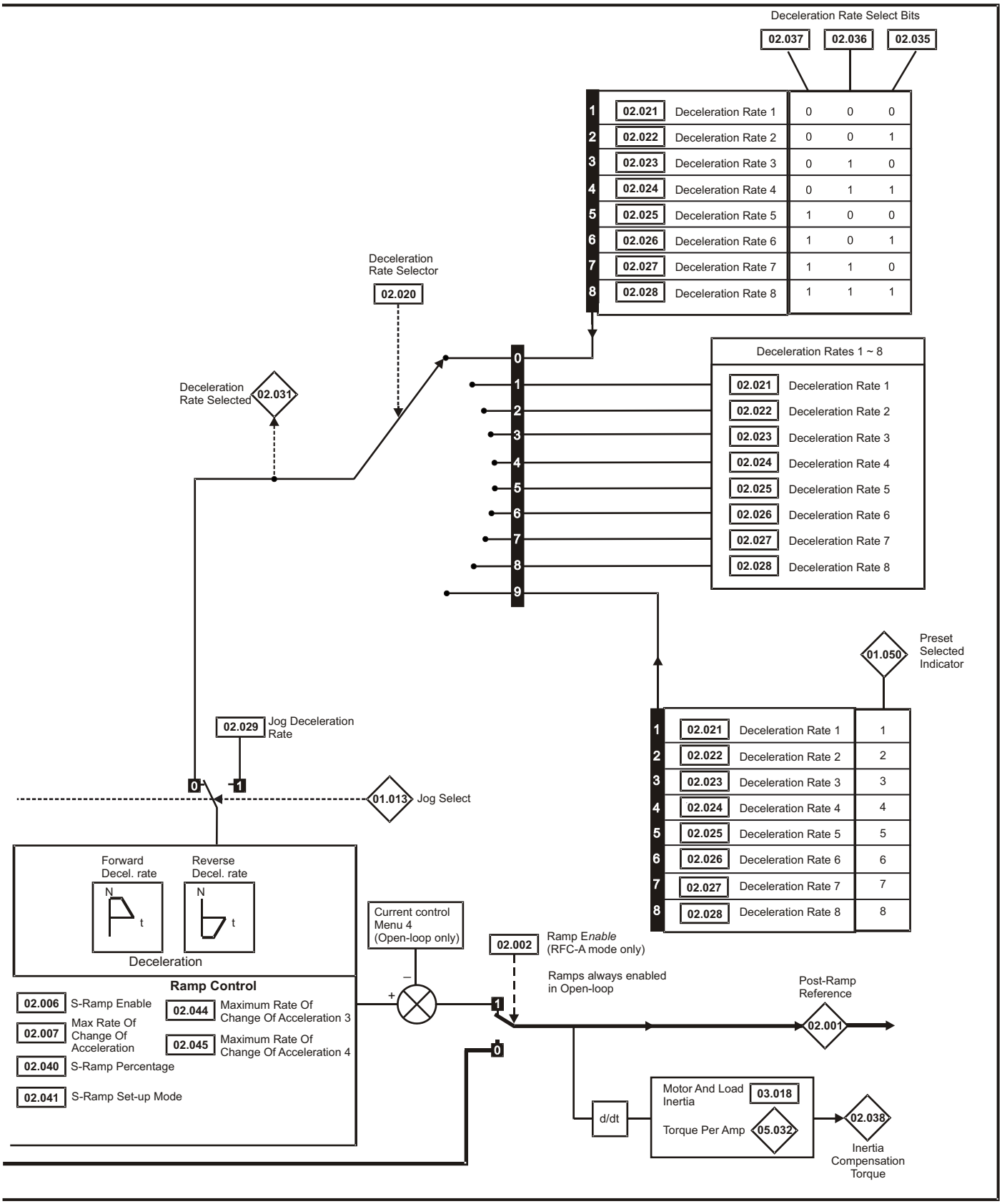
Deceleration Rate Select Bits
02.037
02.036
02.035
1 02.021 Deceleration Rate 1 0 0 0
2 02.022 Deceleration Rate 2 0 0 1
3 02.023 Deceleration Rate 3 0 1 0
4 02.024 Deceleration Rate 4 0 1 1
5 02.025 Deceleration Rate 5 1 0 0
6 02.026 Deceleration Rate 6 1 0 1
7 02.027 Deceleration Rate 7 1 1 0
8 02.028 Deceleration Rate 8 1 1 1
Deceleration Rate Selector
02.020
Deceleration Rate Selected
02.031
Deceleration Rates 1 ~ 8
02.021 Deceleration Rate 1
02.022 Deceleration Rate 2
02.023 Deceleration Rate 3
02.024 Deceleration Rate 4
02.025 Deceleration Rate 5
02.026 Deceleration Rate 6
02.027 Deceleration Rate 7
02.028 Deceleration Rate 8
01.050
Preset Selected Indicator
1 02.021 Deceleration Rate 1 1
2 02.022 Deceleration Rate 2 2
3 02.023 Deceleration Rate 3 3
4 02.024 Deceleration Rate 4 4
5 02.025 Deceleration Rate 5 5
6 02.026 Deceleration Rate 6 6
7 02.027 Deceleration Rate 7 7
8 02.028 Deceleration Rate 8 8
02.029 Jog Deceleration Rate
01.013 Jog Select
Forward Decel. rate
Reverse Decel. rate
Deceleration
Ramp Control
02.006 S-Ramp Enable
02.007 Max Rate Of Change Of Acceleration
02.040 S-Ramp Percentage
02.041 S-Ramp Set-up Mode
02.044 Maximum Rate Of Change Of Acceleration 3
02.045 Maximum Rate Of Change Of Acceleration 4
Current control Menu 4 (Open-loop only)
02.002 Ramp Enable (RFC-A mode only)
Ramps always enabled in Open-loop
Post-Ramp Reference
02.001
d/dt
Motor And Load Inertia 03.018
Torque Per Amp 05.032
02.038
Inertia Compensation Torque

Parameter		Range (⇕)		Default (⇨)		Type					
		OL	RFC-A	OL	RFC-A						
02.001	Post Ramp Reference	0.00 to Pr **01.006** Hz				RO	Num	ND	NC	PT	
02.002	Ramp Enable		Off (0) or On (1)		On (1)	RW	Bit				US
02.003	Ramp Hold	Off (0) or On (1)		Off (0)		RW	Bit				US
02.004	Ramp Mode Select	FASt (0), Std (1), Std.bSt (2), FSt.bSt (3)		Std (1)		RW	Txt				US
02.005	Disable Ramp Output		Off (0) or On (1)		Off (0)	RW	Bit				US
02.006	S Ramp Enable	Off (0) or On (1)		Off (0)		RW	Bit				US
02.007	Max Rate Of Change Of Acceleration	0.0 to 300.0 s²/100Hz		3.1 s²/100 Hz		RW	Num				US
02.008	Standard Ramp Voltage	0 to 1150 V		110 V drive: 375 V 200 V drive: 375 V 400 V drive 50 Hz: 750 V 400 V drive 60 Hz: 775 V 575 V drive: 895 V		RW	Num		RA		US
02.009	Deceleration Fail Detection Disable	Off (0) or On (1)		Off (0)		RW	Bit				US
02.010	Acceleration Rate Selector	0 to 9		0		RW	Num				US
02.011	Acceleration Rate 1	0.0 to 32000.0 s/Maximum Frequency		5.0 s/Maximum Frequency		RW	Num				US
02.012	Acceleration Rate 2					RW	Num				US
02.013	Acceleration Rate 3					RW	Num				US
02.014	Acceleration Rate 4					RW	Num				US
02.015	Acceleration Rate 5					RW	Num				US
02.016	Acceleration Rate 6					RW	Num				US
02.017	Acceleration Rate 7					RW	Num				US
02.018	Acceleration Rate 8					RW	Num				US
02.019	Jog Acceleration Rate	0.0 to 32000.0 s/Maximum Frequency		0.2 s/Maximum Frequency		RW	Num				US
02.020	Deceleration Rate Selector	0 to 9		0		RW	Num				US
02.021	Deceleration Rate 1	0.0 to 32000.0 s/Maximum Frequency		10.0 s/Maximum Frequency		RW	Num				US
02.022	Deceleration Rate 2					RW	Num				US
02.023	Deceleration Rate 3					RW	Num				US
02.024	Deceleration Rate 4					RW	Num				US
02.025	Deceleration Rate 5					RW	Num				US
02.026	Deceleration Rate 6					RW	Num				US
02.027	Deceleration Rate 7					RW	Num				US
02.028	Deceleration Rate 8					RW	Num				US
02.029	Jog Deceleration Rate	0.0 to 32000.0 s/Maximum Frequency		0.2 s/Maximum Frequency		RW	Num				US
02.030	Acceleration Rate Selected	0 to 8				RO	Num	ND	NC	PT	
02.031	Deceleration Rate Selected	0 to 8				RO	Num	ND	NC	PT	
02.032	Acceleration Rate Select Bit 0	Off (0) or On (1)		Off (0)		RW	Bit		NC		
02.033	Acceleration Rate Select Bit 1	Off (0) or On (1)		Off (0)		RW	Bit		NC		
02.034	Acceleration Rate Select Bit 2	Off (0) or On (1)		Off (0)		RW	Bit		NC		
02.035	Deceleration Rate Select Bit 0	Off (0) or On (1)		Off (0)		RW	Bit		NC		
02.036	Deceleration Rate Select Bit 1	Off (0) or On (1)		Off (0)		RW	Bit		NC		
02.037	Deceleration Rate Select Bit 2	Off (0) or On (1)		Off (0)		RW	Bit		NC		
02.038	Inertia Compensation Torque		±1000.0 %			RO	Num	ND	NC	PT	
02.039	Ramp Rate Units	0 (s/100 Hz), 1 (s/Maximum Frequency), 2 (s/1000 Hz)		1 (s/Maximum Frequency)		RW	Num				US
02.040	S Ramp Percentage	0.0 to 50.0 %		0.0 %		RW	Num				US
02.041	S Ramp Set-up Mode	0 to 2		0		RW	Num				US
02.042	Maximum Rate Of Change Of Acceleration 1	0.0 to 300.0 s²/100 Hz		0.0 s²/100 Hz		RW	Num				US
02.043	Maximum Rate Of Change Of Acceleration 2	0.0 to 300.0 s²/100 Hz		0.0 s²/100 Hz		RW	Num				US
02.044	Maximum Rate Of Change Of Acceleration 3	0.0 to 300.0 s²/100 Hz		0.0 s²/100 Hz		RW	Num				US
02.045	Maximum Rate Of Change Of Acceleration 4	0.0 to 300.0 s²/100 Hz		0.0 s²/100 Hz		RW	Num				US

RW	Read / Write	RO	Read only	Num	Number parameter	Bit	Bit parameter	Txt	Text string	Bin	Binary parameter	FI	Filtered
ND	No default value	NC	Not copied	PT	Protected parameter	RA	Rating dependent	US	User save	PS	Power-down save	DE	Destination

11.4 Menu 3: Frequency control

Figure 11-3 Menu 3 Open-loop logic diagram

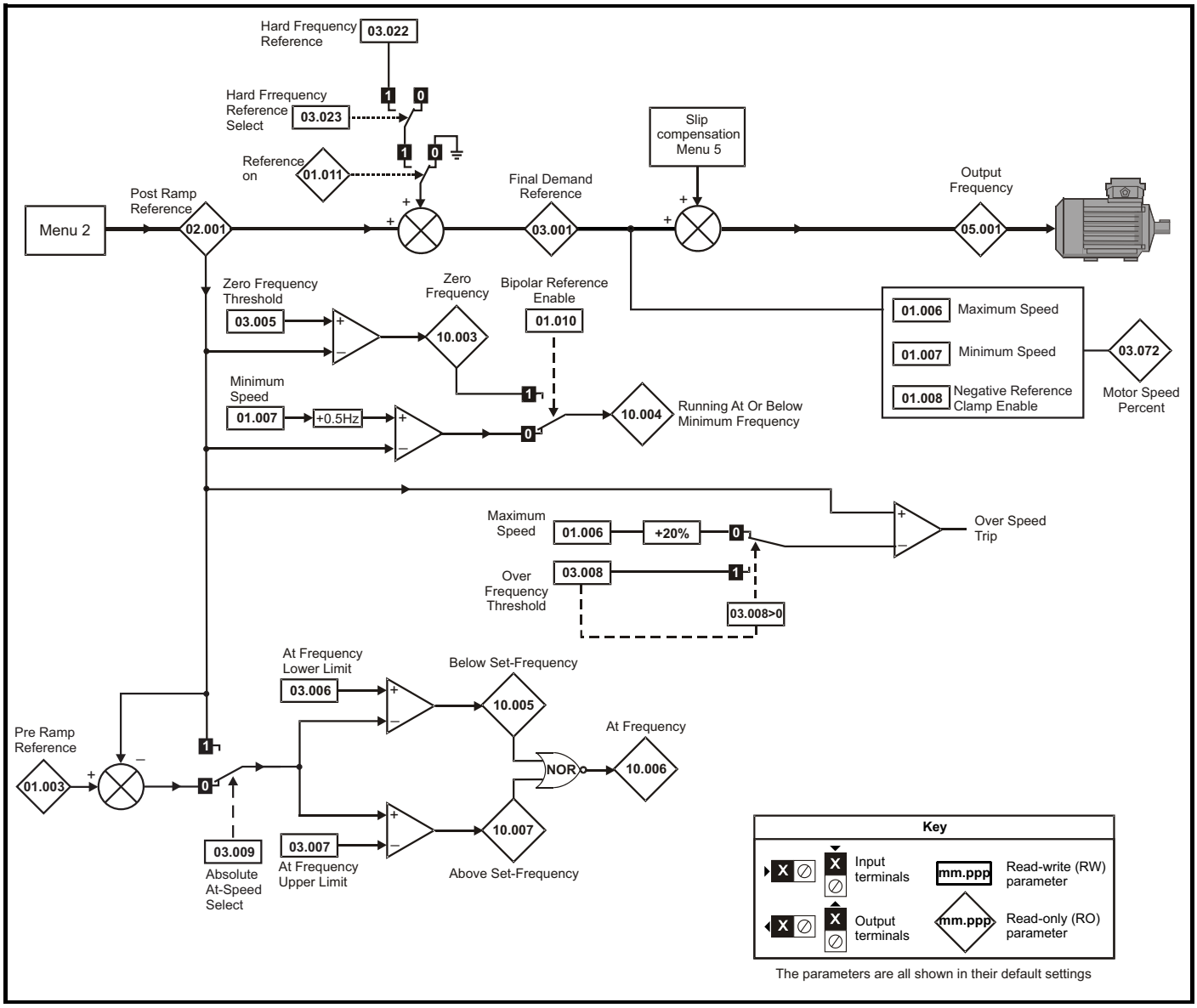

Figure 11-4 Menu 3 RFC-A logic diagram

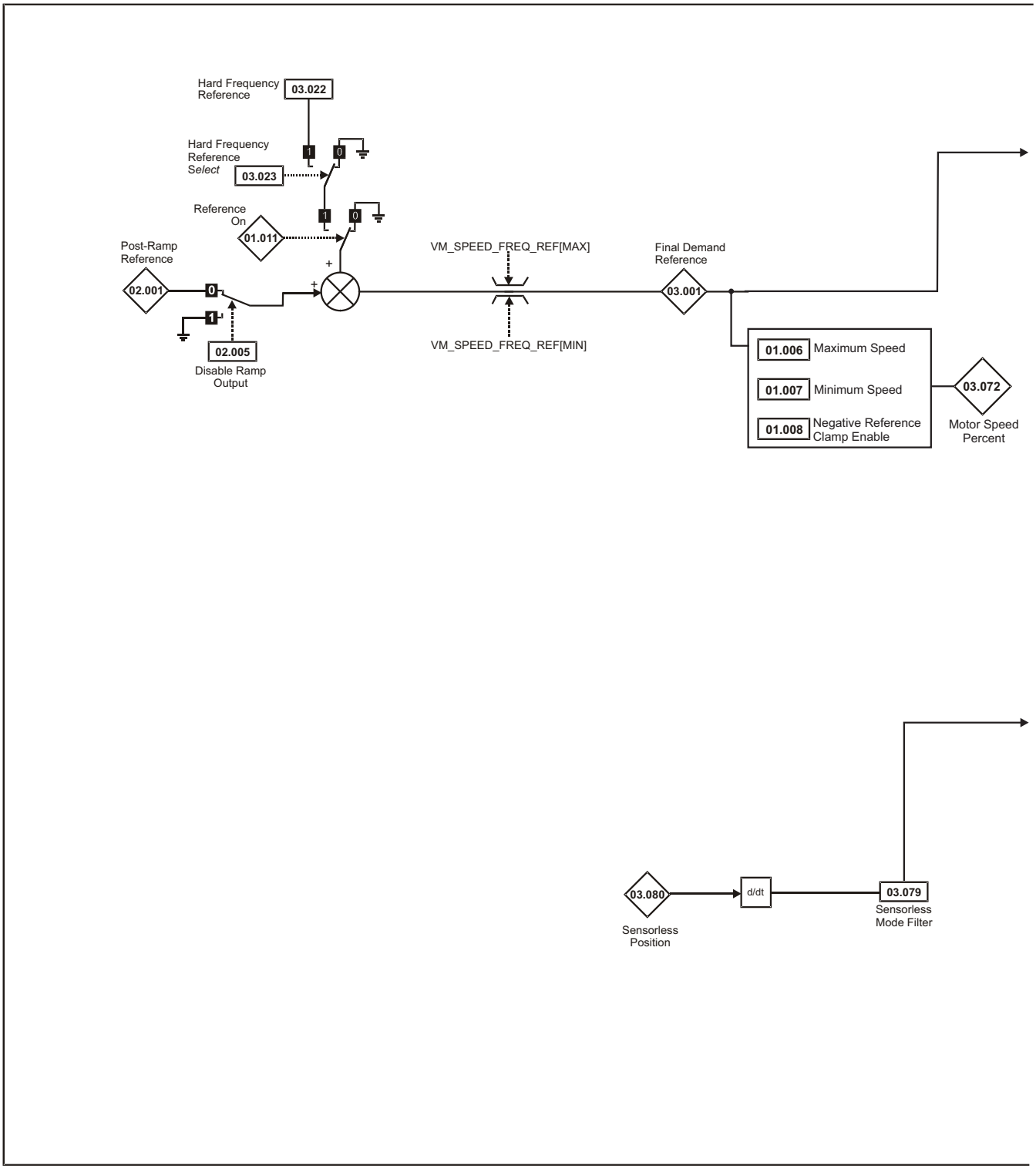

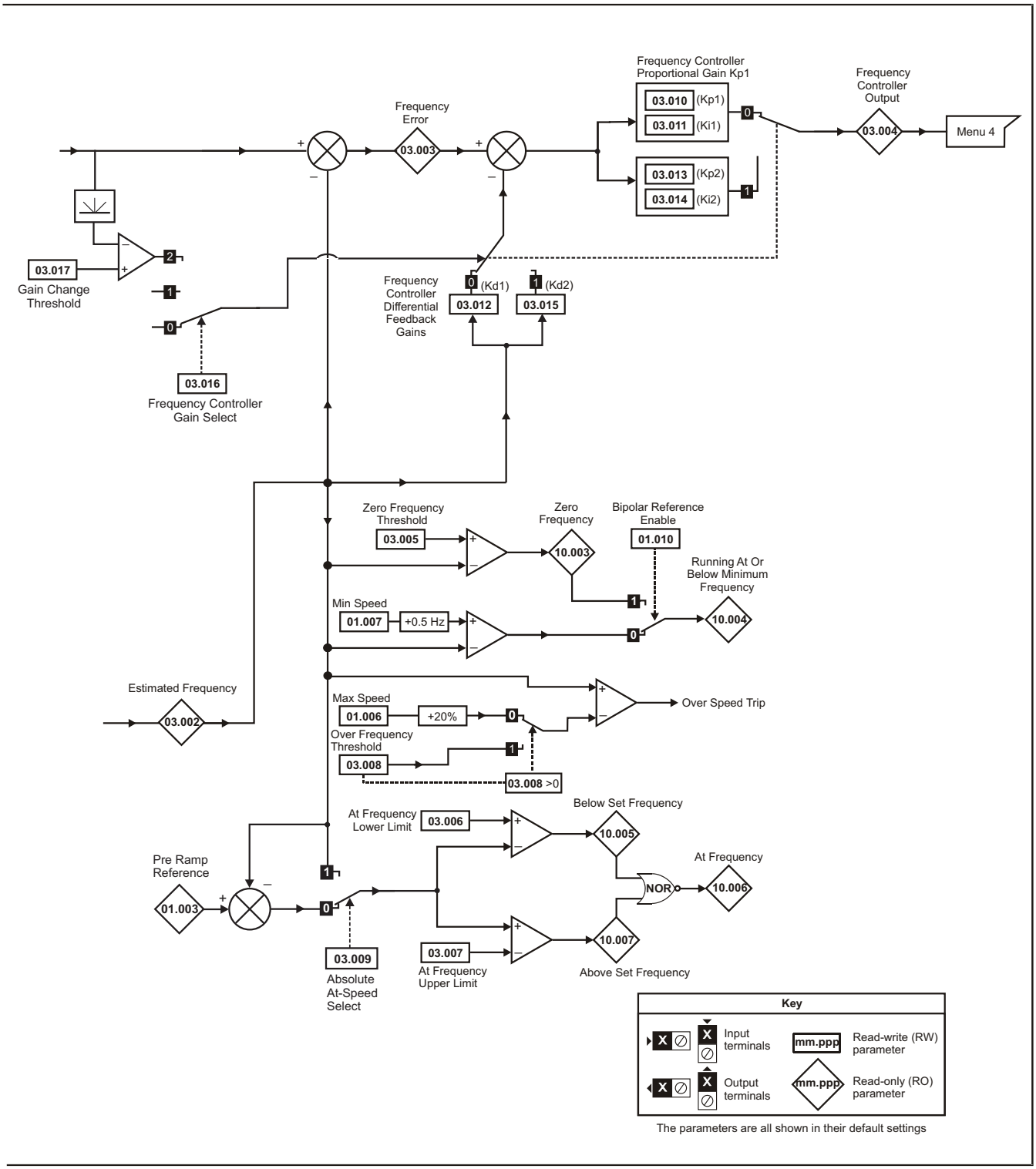
Frequency Controller Proportional Gain Kp1
03.010 (Kp1)
03.011 (Ki1)
03.013 (Kp2)
03.014 (Ki2)
Frequency Controller Output
03.004
Menu 4
Frequency Error
03.003
03.017
Gain Change Threshold
Frequency Controller Differential Feedback Gains
03.012 (Kd1)
03.015 (Kd2)
03.016
Frequency Controller Gain Select
Zero Frequency Threshold
03.005
Zero Frequency
10.003
Bipolar Reference Enable
01.010
Running At Or Below Minimum Frequency
10.004
Min Speed
01.007
+0.5 Hz
Estimated Frequency
03.002
Max Speed
01.006
+20%
Over Speed Trip
Over Frequency Threshold
03.008
03.008 >0
At Frequency Lower Limit
03.006
Below Set Frequency
10.005
Pre Ramp Reference
01.003
NOR
At Frequency
10.006
03.009
Absolute At-Speed Select
03.007
At Frequency Upper Limit
10.007
Above Set Frequency
Key
Input terminals
Output terminals
mm.ppp
Read-write (RW) parameter
Read-only (RO) parameter
The parameters are all shown in their default settings

Figure 11-5 Menu 3 Logic diagram

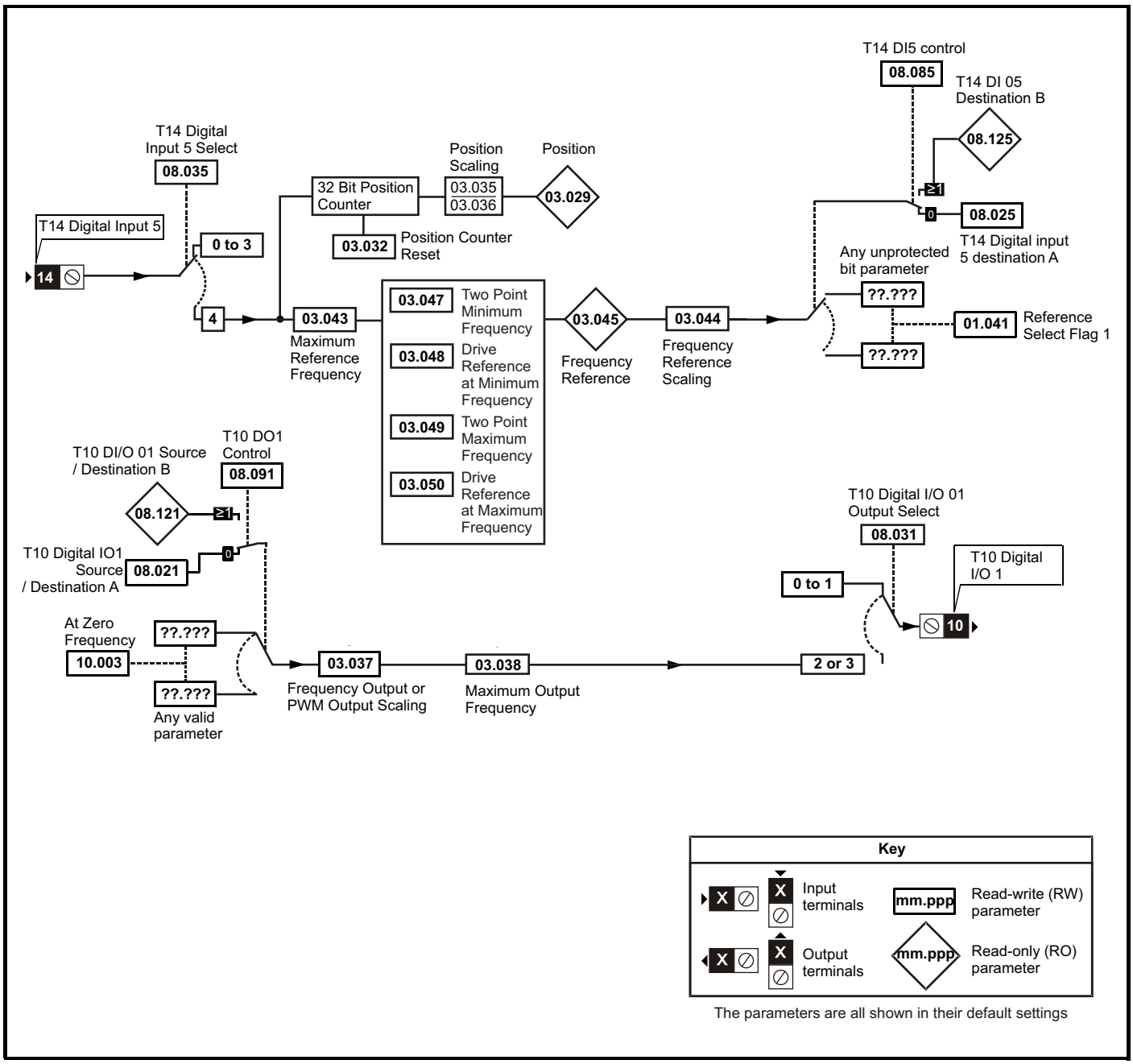

Parameter		Range (⇕)		Default (⇨)		Type					
		OL	RFC-A	OL	RFC-A						
03.001	Final Demand Reference	-Pr **01.006** to Pr **01.006** or Pr **01.007** to Pr **01.006** Hz				RO	Num	ND	NC	PT	FI
03.002	Estimated Frequency		-Pr **01.006** to Pr **01.006** or Pr **01.007** to Pr **01.006** Hz			RO	Num	ND	NC	PT	FI
03.003	Frequency Error		-Pr **01.006** to Pr **01.006** or Pr **01.007** to Pr **01.006** Hz			RO	Num	ND	NC	PT	FI
03.004	Frequency Controller Output		VM_TORQUE_CURRENT %			RO	Num	ND	NC	PT	FI
03.005	Zero Frequency Threshold	0.00 to 20.00 Hz		2.00 Hz		RW	Num				US
03.006	At Frequency Lower Limit	0.00 to 550.00 Hz		1.00 Hz		RW	Num				US
03.007	At Frequency Upper Limit	0.00 to 550.00 Hz		1.00 Hz		RW	Num				US
03.008	Over Frequency Threshold	0.00 to 550.00 Hz		0.00 Hz		RW	Num				US
03.009	Absolute At Frequency Select	Off (0) or On (1)		Off (0)		RW	Bit				US
03.010	Frequency Controller Proportional Gain Kp1		0.000 to 200.000 s/rad		0.100 s/rad	RW	Num				US
03.011	Frequency Controller Integral Gain Ki1		0.00 to 655.35 s^2/rad		0.10 s^2/rad	RW	Num				US
03.012	Frequency Controller Differential Feedback Gain Kd1		0.00000 to 0.65535 1/rad		0.00000 1/rad	RW	Num				US
03.013	Frequency Controller Proportional Gain Kp2		0.000 to 200.000 s/rad		0.100 s/rad	RW	Num				US
03.014	Frequency Controller Integral Gain Ki2		0.00 to 655.35 s^2/rad		0.10 s^2/rad	RW	Num				US
03.015	Frequency Controller Differential Feedback Gain Kd2		0.00000 to 0.65535 1/rad		0.00000 1/rad	RW	Num				US
03.016	Frequency Controller Gain Select		0 to 2		0	RW	Num				US
03.017	Gain Change Threshold		0.00 to 550.00 Hz		0.00 Hz	RW	Num				FI
03.018	Motor and Load Inertia		0.00 to 1000.00 kgm^2		0.00 kgm^2	RW	Num				US
03.022	Hard Frequency Reference	0.00 to Pr **01.006** Hz		0.00 Hz		RW	Num				US
03.023	Hard Frequency Reference Select	Off (0) or On (1)		Off (0)		RW	Bit				US
03.029	Position (T14)	0 to 65535				RO	Num	ND	NC	PT	FI
03.032	Position Counter Reset (T14)	Off (0) or On (1)		Off (0)		RW	Bit		NC		
03.035	Position Scaling Numerator (T14)	0.000 to 1.000		1.000		RW	Num				US
03.036	Position Scaling Denominator (T14)	0.000 to 100.000		1.000		RW	Num				US
03.037	Frequency Output or PWM Output Scaling (T10)	0.000 to 4.000		1.000		RW	Num				US
03.038	Maximum Output Frequency (T10)	1 (0), 2 (1), 5 (2), 10 (3) kHz		5 (2) kHz		RW	Txt				US
03.042	Frequency Input High Precision	Off (0) or On (1)		Off (0)		RW	Bit				US
03.043	Maximum Reference Frequency (T14)	0.00 to 100.00 kHz		10.00 kHz		RW	Num				US
03.044	Frequency Reference Scaling (T14)	0.000 to 4.000		1.000		RW	Num				US
03.045	Frequency Reference (T14)	0.00 to 100.00 %				RO	Num	ND	NC	PT	FI
03.047	Two Point Minimum Frequency (T14)	0.00 to 100.00 %		0.00 %		RW	Num				US
03.048	Drive Reference at Minimum Frequency (T14)	0.00 to 100.00 %		0.00 %		RW	Num				US
03.049	Two Point Maximum Frequency (T14)	0.00 to 100.00 %		100.00 %		RW	Num				US
03.050	Drive Reference at Maximum Frequency (T14)	0.00 to 100.00 %		100.00 %		RW	Num				US
03.072	Motor Speed Percent	± 150.0 %				RO		ND	NC	PT	FI
03.079	Sensorless Mode Filter		4 (0), 5 (1), 6 (2), 8 (3), 12 (4), 20 (5) ms		4 (0) ms	RW	Txt				US
03.080	Sensorless Position		0 to 65535			RO	Num	ND	NC	PT	

RW	Read / Write	RO	Read only	Num	Number parameter	Bit	Bit parameter	Txt	Text string	Bin	Binary parameter	FI	Filtered
ND	No default value	NC	Not copied	PT	Protected parameter	RA	Rating dependent	US	User save	PS	Power-down save	DE	Destination

11.5 Menu 4: Torque and current control

Figure 11-6 Menu 4 Open loop logic diagram

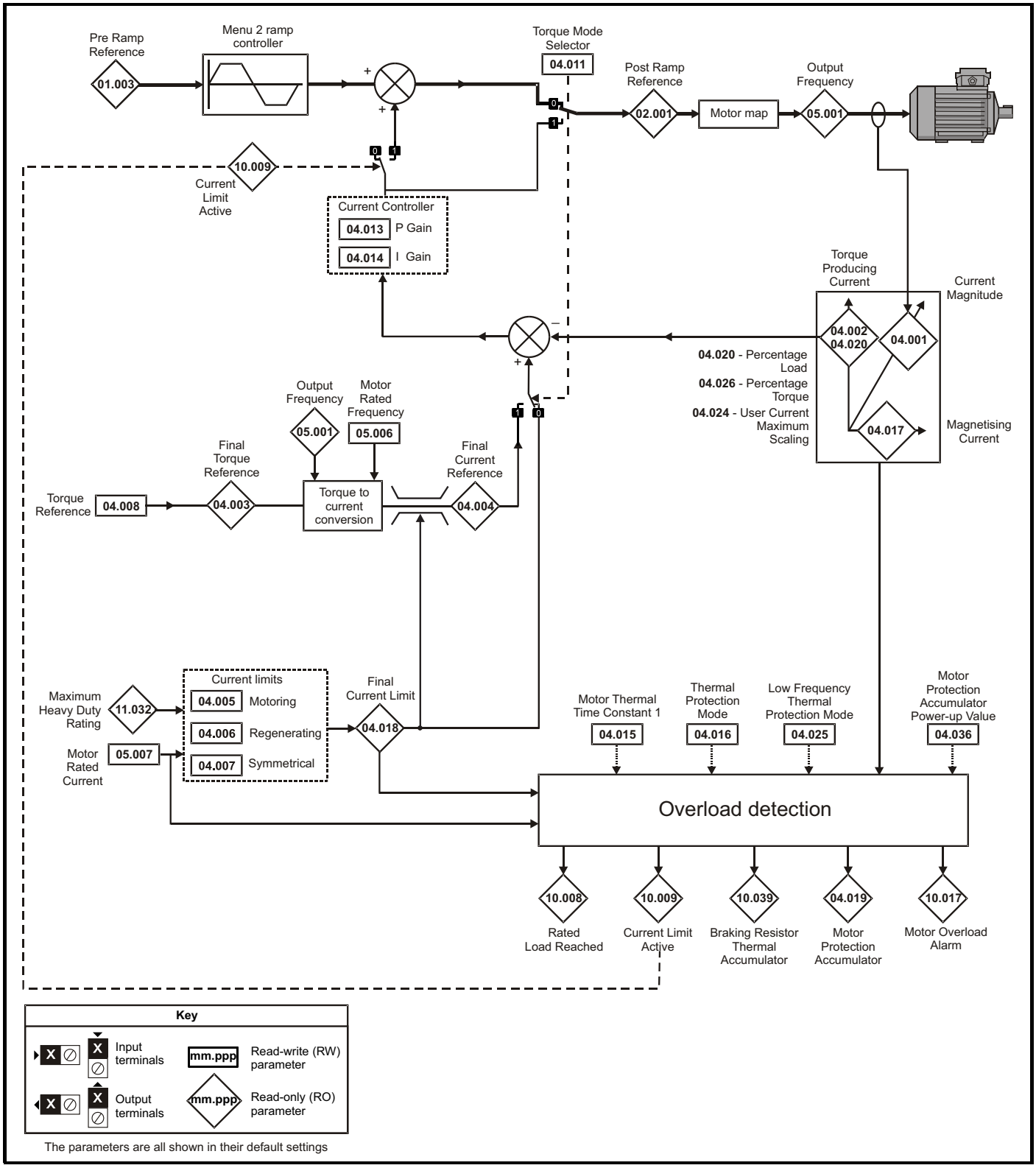

The parameters are all shown in their default settings

Figure 11-7 Menu 4 RFC-A logic diagram

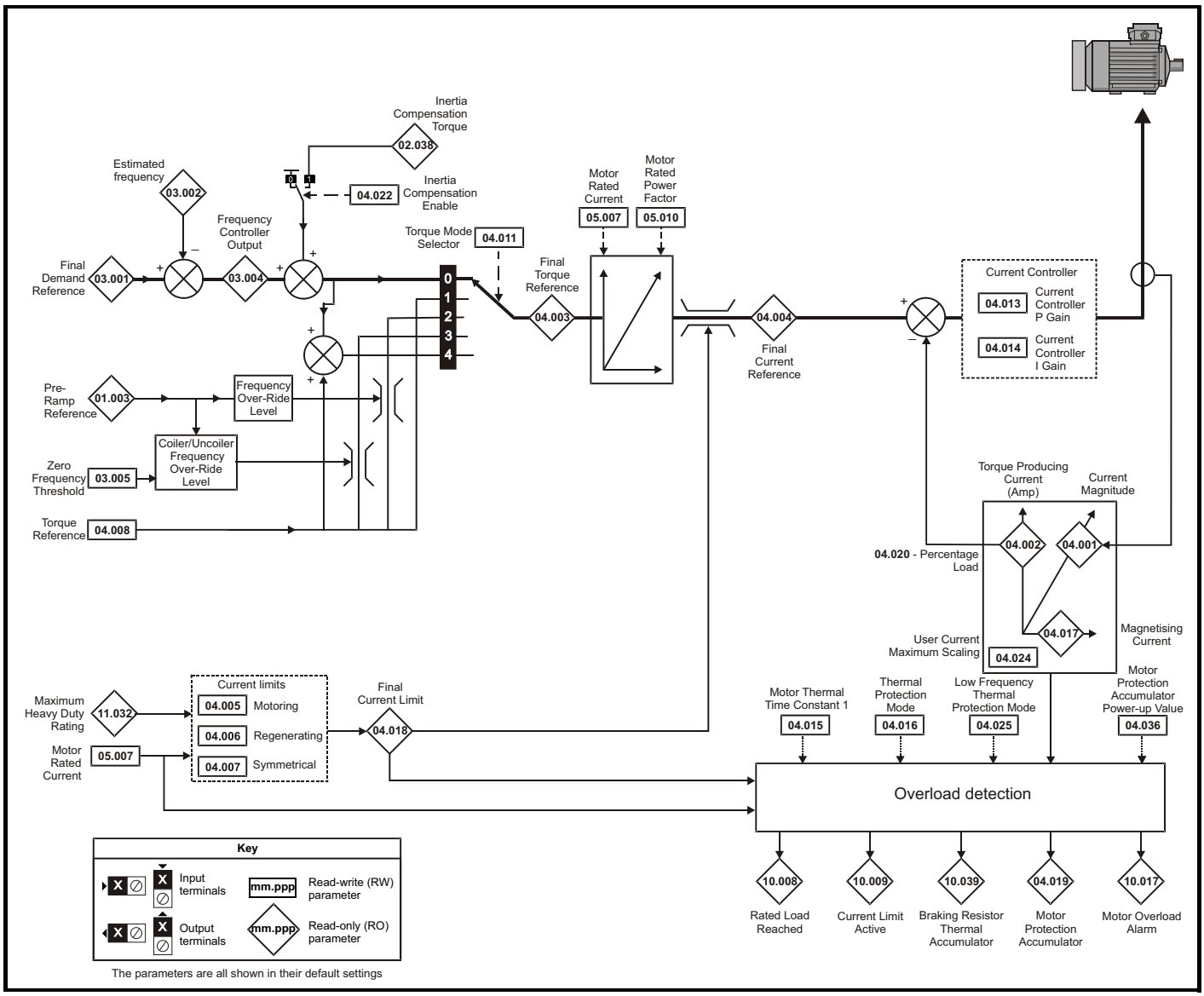

Parameter		Range (⇕)		Default (⇨)		Type					
		OL	RFC-A	OL	RFC-A						
04.001	Current Magnitude	0 to Drive Maximum Current A				RO	Num	ND	NC	PT	FI
04.002	Torque Producing Current	± Drive Maximum Current A				RO	Num	ND	NC	PT	FI
04.003	Final Torque Reference	VM_TORQUE_CURRENT %				RO	Num	ND	NC	PT	FI
04.004	Final Current Reference	VM_TORQUE_CURRENT %				RO	Num	ND	NC	PT	FI
04.005	Motoring Current Limit	0.0 to VM_MOTOR1_CURRENT_LIMIT %		165.0 %*	175.0 %**	RW	Num		RA		US
04.006	Regenerating Current Limit	0.0 to VM_MOTOR1_CURRENT_LIMIT %		165.0 %*	175.0 %**	RW	Num		RA	US	
04.007	Symmetrical Current Limit	0.0 to VM_MOTOR1_CURRENT_LIMIT %		165.0 %*	175.0 %**	RW	Num		RA		US
04.008	Torque Reference	VM_USER_CURRENT %		0.0 %		RW	Num				US
04.011	Torque Mode Selector	0 to 1	0 to 5	0		RW	Num				US
04.013	Current Controller Kp Gain	0.00 to 4000.00		20.00		RW	Num				US
04.014	Current Controller Ki Gain	0.000 to 600.000		40.000		RW	Num				US
04.015	Motor Thermal Time Constant 1	1 to 3000 s		179 s		RW	Num				US
04.016	Thermal Protection Mode	0 (0) to 3 (3)		0 (0)		RW	Bin				US
04.017	Magnetising Current	0 to Drive Maximum Current A				RO	Num	ND	NC	PT	FI
04.018	Final Current Limit	VM_TORQUE_CURRENT %				RO	Num	ND	NC	PT	
04.019	Motor Protection Accumulator	0.0 to 100.0 %				RO	Num	ND	NC	PT	PS
04.020	Percentage Load	VM_USER_CURRENT %				RO	Num	ND	NC	PT	FI
04.022	Inertia Compensation Enable		Off (0) or On (1)		Off (0)	RW	Bit				US
04.024	User Current Maximum Scaling	0.0 to VM_TORQUE_CURRENT_UNIPOLAR %		165.0 %*	175.0 %**	RW	Num		RA		US
04.025	Low Frequency Thermal Protection Mode	0 to 1		0		RW	Num				US
04.026	Percentage Torque	VM_USER_CURRENT %				RO	Num	ND	NC	PT	FI
04.036	Motor Protection Accumulator Power-up Value	Pr.dn (0), 0 (1), rEAL t (2)		Pr.dn (0)		RW	Txt				US
04.041	User Over Current Trip Level	0 to 100 %		100 %		RW	Num		RA		US

* For size 9 the default is 141.9 %

** For size 9 the default is 150.0 %

RW	Read / Write	RO	Read only	Num	Number parameter	Bit	Bit parameter	Txt	Text string	Bin	Binary parameter	FI	Filtered
ND	No default value	NC	Not copied	PT	Protected parameter	RA	Rating dependent	US	User save	PS	Power-down save	DE	Destination

11.6 Menu 5: Motor control

Figure 11-8 Menu 5 Open-loop logic diagram

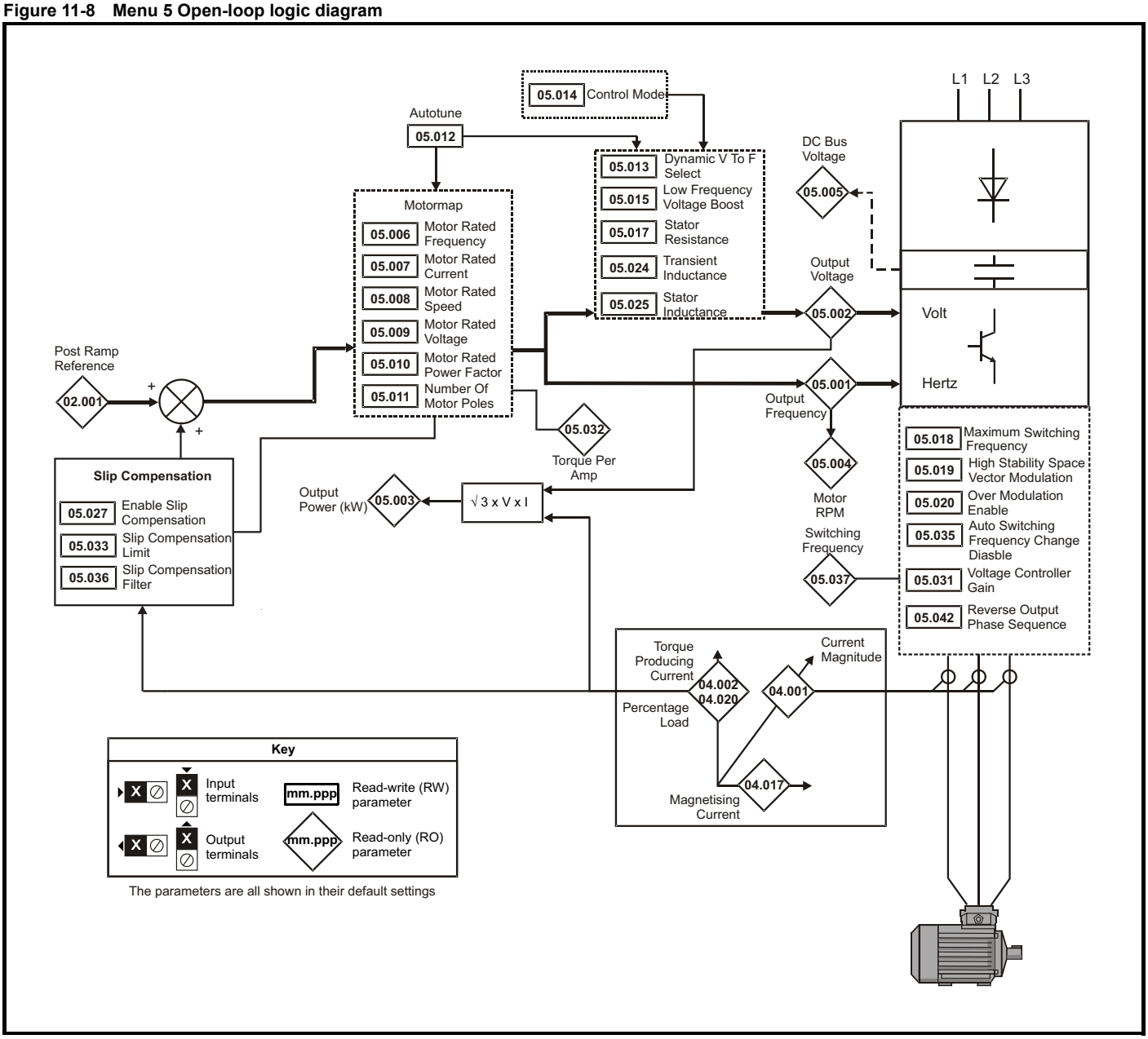

Figure 11-9 Menu 5 RFC-A, logic diagram

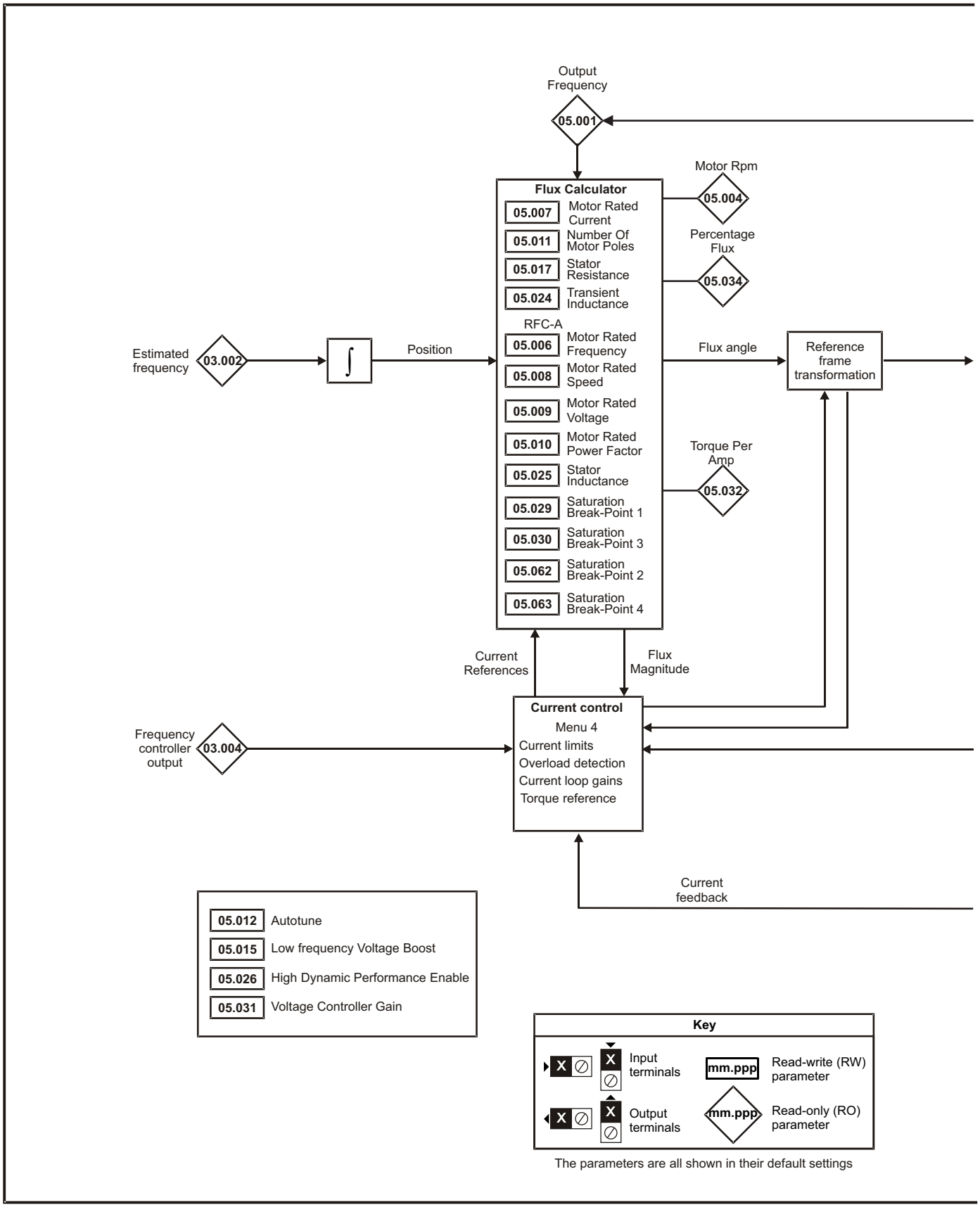

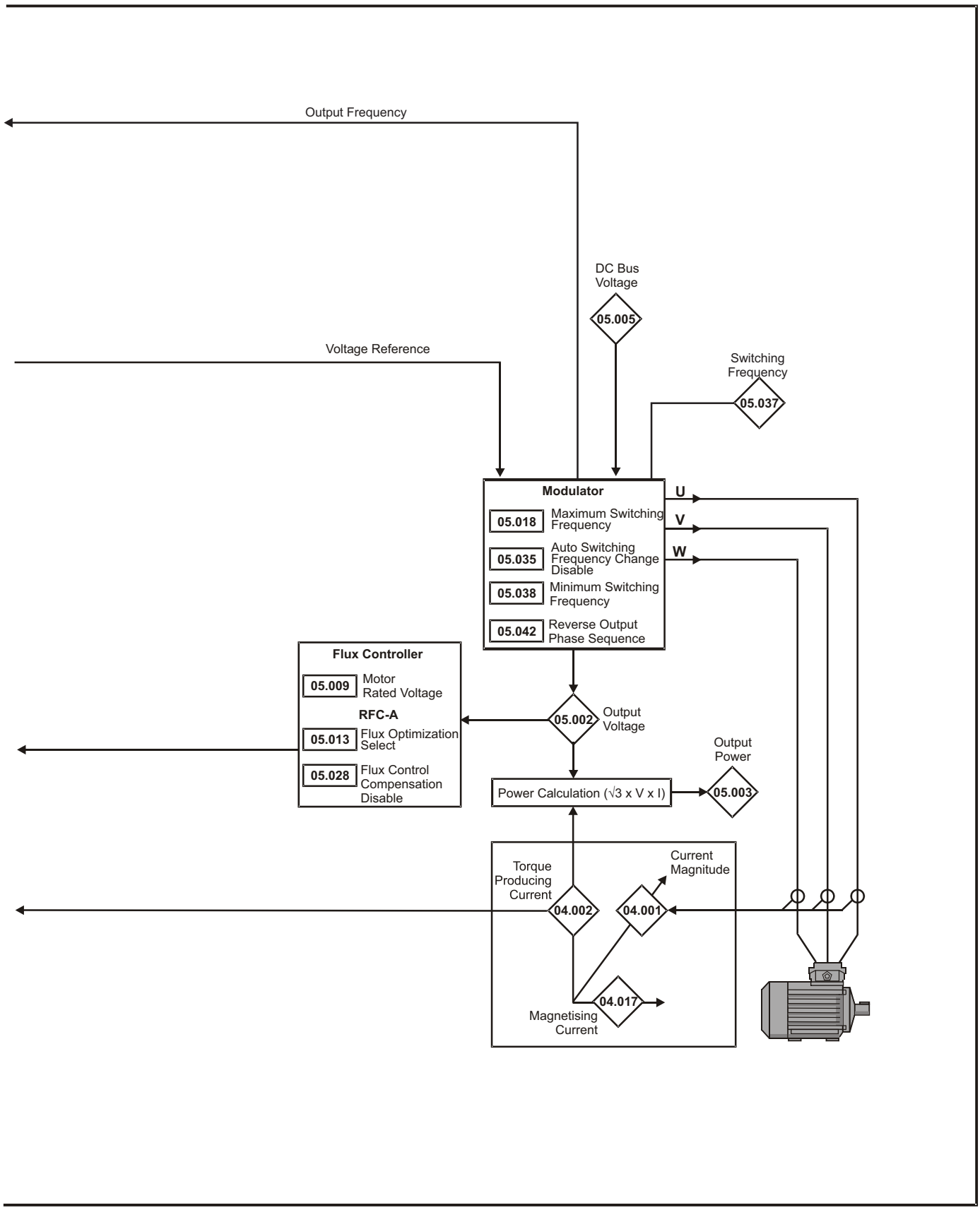
Output Frequency
DC Bus Voltage
05.005
Voltage Reference
Switching Frequency
05.037
Modulator
05.018 Maximum Switching Frequency
05.035 Auto Switching Frequency Change Disable
05.038 Minimum Switching Frequency
05.042 Reverse Output Phase Sequence
U
V
W
Flux Controller
05.009 Motor Rated Voltage
RFC-A
05.013 Flux Optimization Select
05.028 Flux Control Compensation Disable
05.002 Output Voltage
Output Power
Power Calculation (√3 x V x I)
05.003
Torque Producing Current
Current Magnitude
04.002
04.001
04.017
Magnetising Current

Parameter		Range (⇕)		Default (⇨)		Type					
		OL	RFC-A	OL	RFC-A						
05.001	Output Frequency	± 550.00 Hz				RO	Num	ND	NC	PT	FI
05.002	Output Voltage	0 to 930 V				RO	Num	ND	NC	PT	FI
05.003	Output Power	VM_POWER kW				RO	Num	ND	NC	PT	FI
05.004	Motor Rpm	± 33000.0 rpm				RO	Num	ND	NC	PT	FI
05.005	D.C. Bus Voltage	0 to 1190 V				RO	Num	ND	NC	PT	FI
05.006	Motor Rated Frequency	0.00 to 550.00 Hz		50 Hz: 50.00 Hz, 60 Hz: 60.00 Hz		RW	Num		RA		US
05.007	Motor Rated Current	0.00 to Drive Rating A		Maximum Heavy Duty Rating (11.032)		RW	Num		RA		US
05.008	Motor Rated Speed	0.0 to 33000.0 rpm		50 Hz: 1500.0 rpm 60 Hz: 1800.0 rpm	50 Hz: 1450.0 rpm 60 Hz: 1750.0 rpm	RW	Num				US
05.009	Motor Rated Voltage	0 to 765 V		110 V drive: 230 V, 200 V drive: 230 V 400 V drive 50Hz: 400 V 400 V drive 60Hz: 460 V 575 V drive: 575 V		RW	Num		RA		US
05.010	Motor Rated Power Factor	0.00 to 1.00		0.85		RW	Num		RA		US
05.011	Number Of Motor Poles*	Auto (0) to 32 (16)		Auto (0)		RW	Num				US
05.012	Autotune	0 to 2	0 to 3	0		RW	Num		NC		
05.013	Dynamic V To F Select / Flux Optimization Select	0 to 1		0		RW	Num				US
05.014	Control Mode	Ur.S (0), Ur (1), Fd (2), Ur.Auto (3), Ur.I (4), SrE (5), Fd.tAP (6)		Fd (2)		RW	Txt				US
05.015	Low Frequency Voltage Boost	0.0 to 25.0 %		3.0 %		RW	Num				US
05.017	Stator Resistance	0.0000 to 99.9999 Ω		0.0000 Ω		RW	Num		RA		US
05.018	Maximum Switching Frequency	0.667 (0), 1 (1), 2 (2), 3 (3), 4 (4), 6 (5), 8 (6), 12 (7), 16 (8) kHz	2 (2), 3 (3), 4 (4), 6 (5), 8 (6), 12 (7), 16 (8) kHz	3 (3) kHz		RW	Txt		RA		US
05.019	High Stability Space Vector Modulation	Off (0) or On (1)		Off (0)		RW	Bit				US
05.020	Over Modulation Enable	Off (0) or On (1)		Off (0)		RW	Bit				US
05.021	Mechanical Load Test Level		0 to 100 %		0 %	RW	Bit				US
05.024	Transient Inductance	0.000 to 500.000 mH		0.000 mH		RW	Num		RA		US
05.025	Stator Inductance	0.00 to 5000.00 mH		0.00 mH		RW	Num		RA		US
05.026	High Dynamic Performance Enable		Off (0) or On (1)		Off (0)	RW	Bit				US
05.027	Enable Slip Compensation	± 150.0 %		100.0 %		RW	Num				US
05.028	Flux Control Compensation Disable	Off (0) or On (1)		Off (0)		RW	Bit				US
05.029	Saturation Breakpoint 1		0.0 to 100.0 %		50.0 %	RW	Num				US
05.030	Saturation Breakpoint 3		0.0 to 100.0 %		75.0 %	RW	Num				US
05.031	Voltage Controller Gain	1 to 30		1		RW	Num				US
05.032	Torque Per Amp	0.00 to 500.00 Nm/A				RO	Num	ND	NC	PT	
05.033	Slip Compensation Limit	0.00 to 10.00 Hz		10.00 Hz		RW	Num				US
05.034	Percentage Flux		0.0 to 150.0 %			RO	Num	ND	NC	PT	
05.035	Auto-switching Frequency Change Disable	0 to 1		0		RW	Num				US
05.036	Slip Compensation Filter	64 (0), 128 (1), 256 (2), 512 (3) ms		128 (1) ms		RW	Txt				US
05.037	Switching Frequency	0.667 (0), 1 (1), 2 (2), 3 (3), 4 (4), 6 (5), 8 (6), 12 (7), 16 (8) kHz	2 (2), 3 (3), 4 (4), 6 (5), 8 (6), 12 (7), 16 (8) kHz			RO	Txt	ND	NC	PT	
05.038	Minimum Switching Frequency	0 to VM_MAX_SWITCHING_FREQUENCY kHz		0.667 (0) kHz	2 kHz (2)	RW	Txt		RA		
05.040	Spin Start Boost	0.0 to 10.0		1.0		RW	Num				US
05.042	Reverse Output Phase Sequence	Off (0) or On (1)		Off (0)		RW	Bit				US
05.059	Maximum Deadtime Compensation	0.000 to 10.000 µs				RO	Num		NC	PT	US
05.060	Current At Maximum Deadtime Compensation	0.00 to 100.00 %				RO	Num		NC	PT	US
05.061	Disable Deadtime Compensation	Off (0) or On (1)		Off (0)		RW	Bit				US
05.062	Saturation Breakpoint 2		0.0 to 100.0 %		0.0 %	RW	Num				US
05.063	Saturation Breakpoint 4		0.0 to 100.0 %		0.0 %	RW	Num				US
05.074	Boost End Voltage	0.0 to 100.0 %		50.0 %		RW	Num				US
05.075	Boost End Frequency	0.0 to 100.0 %		50.0 %		RW	Num				US
05.076	Second Point Voltage	0.0 to 100.0 %		55.0 %		RW	Num				US
05.077	Second Point Frequency	0.0 to 100.0 %		55.0 %		RW	Num				US
05.078	Third point voltage	0.0 to 100.0 %		75.0 %		RW	Num				US
05.079	Third point frequency	0.0 to 100.0 %		75.0 %		RW	Num				US
05.080	Low acoustic noise enable	Off (0) or On (1)		Off (0)		RW	Bit				US

Parameter		Range (⇕)		Default (⇨)		Type					
		OL	RFC-A	OL	RFC-A						
05.081	Change to maximum drive switching frequency at low output current	Off (0) or On (1)		Off (0)		RW	Bit				US
05.083	Voltage Shelving Disable	Off (0) or On (1)		Off (0)		RW	Bit				US
05.084	Low Frequency Slip Boost	0.0 to 100.0 %		0.0 %		RW	Num				US
	Low Frequency Estimator Threshold		0.0 to 100.0 %		0.0 %	RW	Num				US
05.088	Ur Mode Pre-Flux Delay	0.0 to 0.7 s		0.1 s		RW	Num				US

* If this parameter is read via serial communications, it will show pole pairs.

RW	Read / Write	RO	Read only	Num	Number parameter	Bit	Bit parameter	Txt	Text string	Bin	Binary parameter	FI	Filtered
ND	No default value	NC	Not copied	PT	Protected parameter	RA	Rating dependent	US	User save	PS	Power-down save	DE	Destination

11.7 Menu 6: Sequencer and clock

Figure 11-10 Menu 6 logic diagram

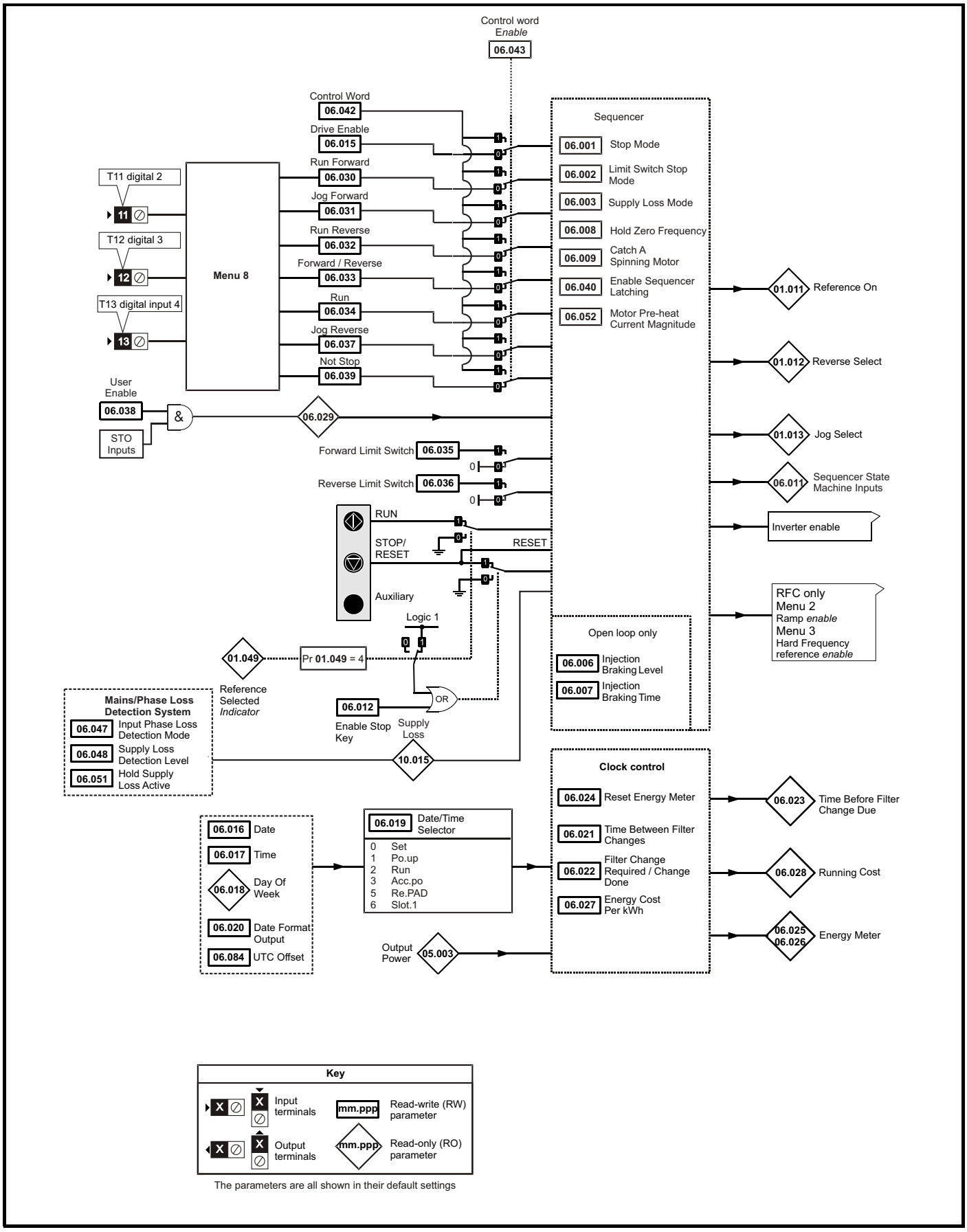

The parameters are all shown in their default settings

Parameter		Range (⇕)		Default(⇨)		Type					
		OL	RFC-A	OL	RFC-A						
06.001	Stop Mode	CoASt (0), rP (1), rP.dc I (2), dc I (3), td.dc I (4), diS (5)	CoASt (0), rP (1), rP.dc I (2), dc I (3), td.dc I (4), diS (5), No.rP (6)	rP (1)		RW	Txt				US
06.002	Limit Switch Stop Mode	StoP (0), rP (1)		rP (1)		RW	Txt				US
06.003	Supply Loss Mode	diS (0), rP.StoP (1), ridE.th (2), Lt.StoP (3)		diS (0)		RW	Txt				US
06.004	Start/Stop Logic Select	0 to 6		5		RW	Num				US
06.006	Injection Braking Level	0.0 to 150.0 %		100.0 %		RW	Num		RA		US
06.007	Injection Braking Time	0.0 to 100.0 s		1.0 s		RW	Num				US
06.008	Hold Zero Frequency	Off (0) or On (1)		Off (0)		RW	Bit				US
06.009	Catch A Spinning Motor	diS (0), EnAbLE (1), Fr.OnLy (2), rv.OnLy (3)		diS (0)		RW	Txt				US
06.010	Enable Conditions	0 to 4087				RO	Bin	ND	NC	PT	
06.011	Sequencer State Machine Inputs	0 to 127				RO	Bin	ND	NC	PT	
06.012	Enable Stop Key	Off (0) or On (1)		Off (0)		RW	Bit				US
06.013	Enable Auxiliary Key	diS (0), Fd.rv (1), rEv (2)		diS (0)		RW	Txt				US
06.014	Disable Auto Reset On Enable	Off (0) or On (1)		Off (0)		RW	Bit				US
06.015	Drive Enable	Off (0) or On (1)		On (1)		RW	Bit				US
06.016	Date	00-00-00 to 31-12-99				RW	Date	ND	NC	PT	
06.017	Time	00:00:00 to 23:59:59				RW	Time	ND	NC	PT	
06.018	Day Of Week	Sun (0), Non (1), tuE (2), UEd (3),thu (4), Fri (5), SAt (6)				RO	Txt	ND	NC	PT	
06.019	Date/Time Selector	SEt (0), Po.uP (1), run (2), Acc.Po (3), rE.PAd (5), SLot.1 (6)		Po.uP (1)		RW	Txt				US
06.020	Date Format	Std (0), US (1)		Std (0)		RW	Txt				US
06.021	Time Between Filter Changes	0 to 30000 Hours		0 Hours		RW	Num				US
06.022	Filter Change Required /Change Done	Off (0) or On (1)				RW	Bit	ND	NC		
06.023	Time Before Filter Change Due	0 to 30000 Hours				RO	Num	ND	NC	PT	PS
06.024	Reset Energy Meter	Off (0) or On (1)		Off (0)		RW	Bit				
06.025	Energy Meter: MWh	±999.9 MWh				RO	Num	ND	NC	PT	PS
06.026	Energy Meter: kWh	±99.99 kWh				RO	Num	ND	NC	PT	PS
06.027	Energy Cost Per kWh	0.0 to 600.0		0.0		RW	Num				US
06.028	Running Cost	±32000				RO	Num	ND	NC	PT	
06.029	Hardware Enable	Off (0) or On (1)				RO	Bit	ND	NC	PT	
06.030	Run Forward	Off (0) or On (1)		Off (0)		RW	Bit		NC		
06.031	Jog Forward	Off (0) or On (1)		Off (0)		RW	Bit		NC		
06.032	Run Reverse	Off (0) or On (1)		Off (0)		RW	Bit		NC		
06.033	Forward/Reverse	Off (0) or On (1)		Off (0)		RW	Bit		NC		
06.034	Run	Off (0) or On (1)		Off (0)		RW	Bit		NC		
06.035	Forward Limit Switch	Off (0) or On (1)		Off (0)		RW	Bit		NC		
06.036	Reverse Limit Switch	Off (0) or On (1)		Off (0)		RW	Bit		NC		
06.037	Jog Reverse	Off (0) or On (1)		Off (0)		RW	Bit		NC		
06.038	User Enable	Off (0) or On (1)		On (1)		RW	Bit		NC		
06.039	Not Stop	Off (0) or On (1)		Off (0)		RW	Bit		NC		
06.040	Enable Sequencer Latching	Off (0) or On (1)		Off (0)		RW	Bit				US
06.041	Drive Event Flags	0 to 3		0		RW	Bin		NC		
06.042	Control Word	0 to 32767		0		RW	Bin		NC		
06.043	Control Word Enable	0 to 1		0		RW	Num				US
06.045	Cooling Fan control	0 to 5		2		RW	Num				US
06.047	Input Phase Loss Detection Mode	FuLL (0), rIPPLE (1), diS (2)		FuLL (0)		RW	Txt				US
06.048	Supply Loss Detection Level	0 to VM_SUPPLY_LOSS_LEVEL V		110 V drive: 205 V, 200 V drive: 205 V 400 V drive: 410 V, 575 V drive: 540 V		RW	Num		RA		US
06.051	Hold Supply Loss Active	Off (0) or On (1)		Off (0)		RW	Bit		NC		
06.052	Motor Pre-heat Current Magnitude	0 to 100 %		0 %		RW	Num				US
06.058	Output Phase Loss Detection Time	0.5 (0) to 4 (3) s		0.5 (0) s		RW	Txt				US
06.059	Output Phase Loss Detection Enable	Off (0) or On (1)		Off (0)		RW	Bit				US
06.060	Standby Mode Enable	Off (0) or On (1)		Off (0)		RW	Bit				US
06.061	Standby Mode Mask	0 to 15		0		RW	Bin				US
06.071	Slow Rectifier Charge Rate Enable	Off (0) or On (1)		Off (0)		RW	Bit				US
06.073	Braking IGBT Lower Threshold	0 to VM_DC_VOLTAGE_SET V		110 V drive: 390 V, 200 V drive: 390 V 400 V drive: 780 V, 575 V drive: 930 V		RW	Num		RA		US
06.074	Braking IGBT Upper Threshold	0 to VM_DC_VOLTAGE_SET V		110 V drive: 390 V, 200 V drive: 390 V 400 V drive: 780 V, 575 V drive: 930 V		RW	Num		RA		US

Parameter		Range (⇕)		Default(⇨)		Type					
		OL	RFC-A	OL	RFC-A						
06.075	Low Voltage Braking IGBT Threshold	0 to VM_DC_VOLTAGE_SET V		0 V		RW	Num		RA		US
06.076	Low Voltage Braking IGBT Threshold Select	Off (0) or On (1)		Off (0)		RW	Bit				
06.077	Low DC Link Operation	Off (0) or On (1)		Off (0)		RW	Bit				US
06.084	UTC Offset	±24.00 Hours		0.00 Hours		RW	Num				US
06.089	DC Injection Active	Off (0) or On (1)				RO	Bit	ND	NC	PT	US

RW	Read / Write	RO	Read only	Num	Number parameter	Bit	Bit parameter	Txt	Text string	Bin	Binary parameter	FI	Filtered
ND	No default value	NC	Not copied	PT	Protected parameter	RA	Rating dependent	US	User save	PS	Power-down save	DE	Destination
IP	IP address	Mac	Mac address	Date	Date parameter	Time	Time parameter	SMP	Slot,menu,parameter	Chr	Character parameter	Ver	Version number

11.8 Menu 7: Analog I/O

Figure 11-11 Menu 7 logic diagram

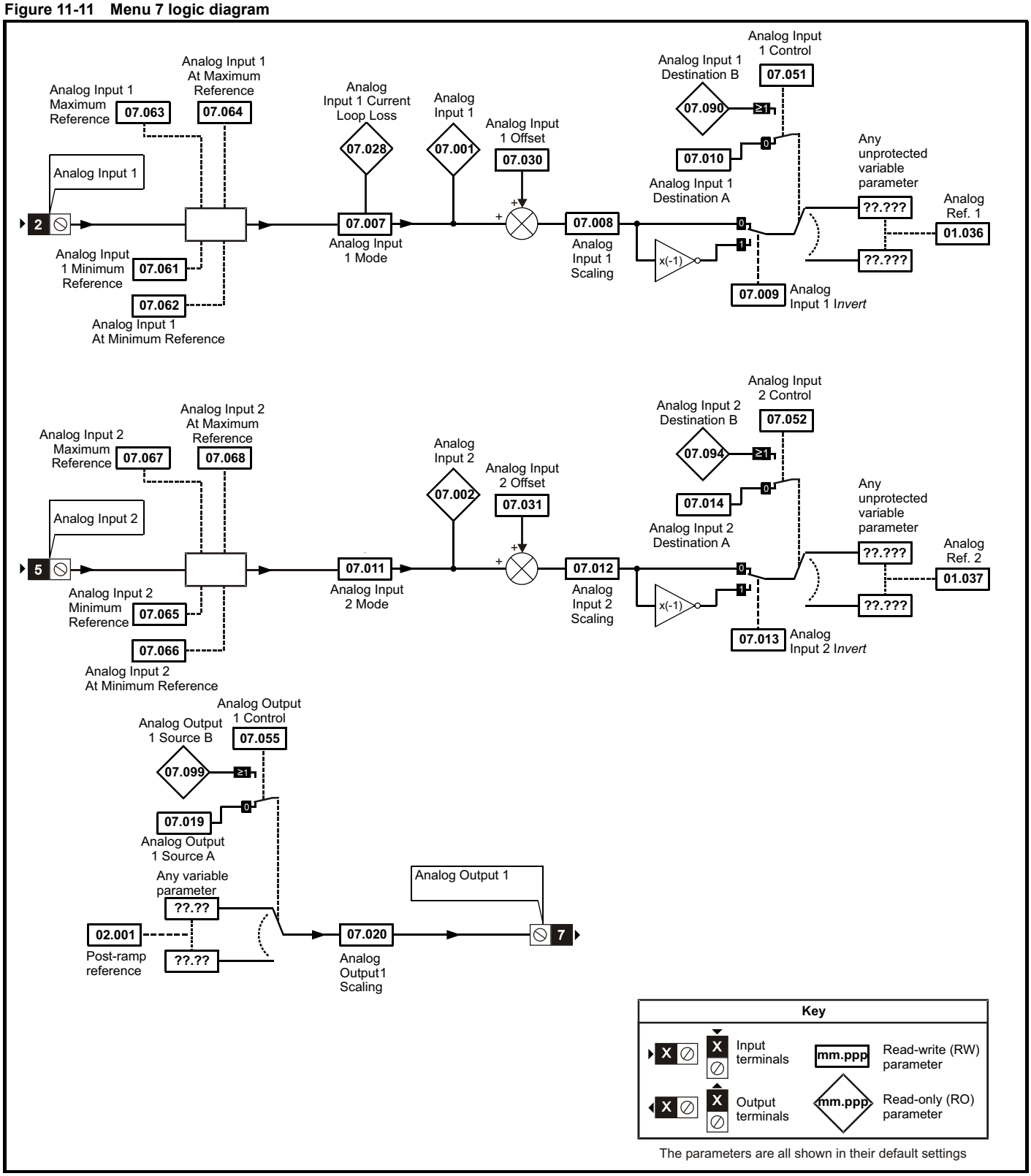

The parameters are all shown in their default settings

Figure 11-12 Menu 7 logic diagram: Thermistor input

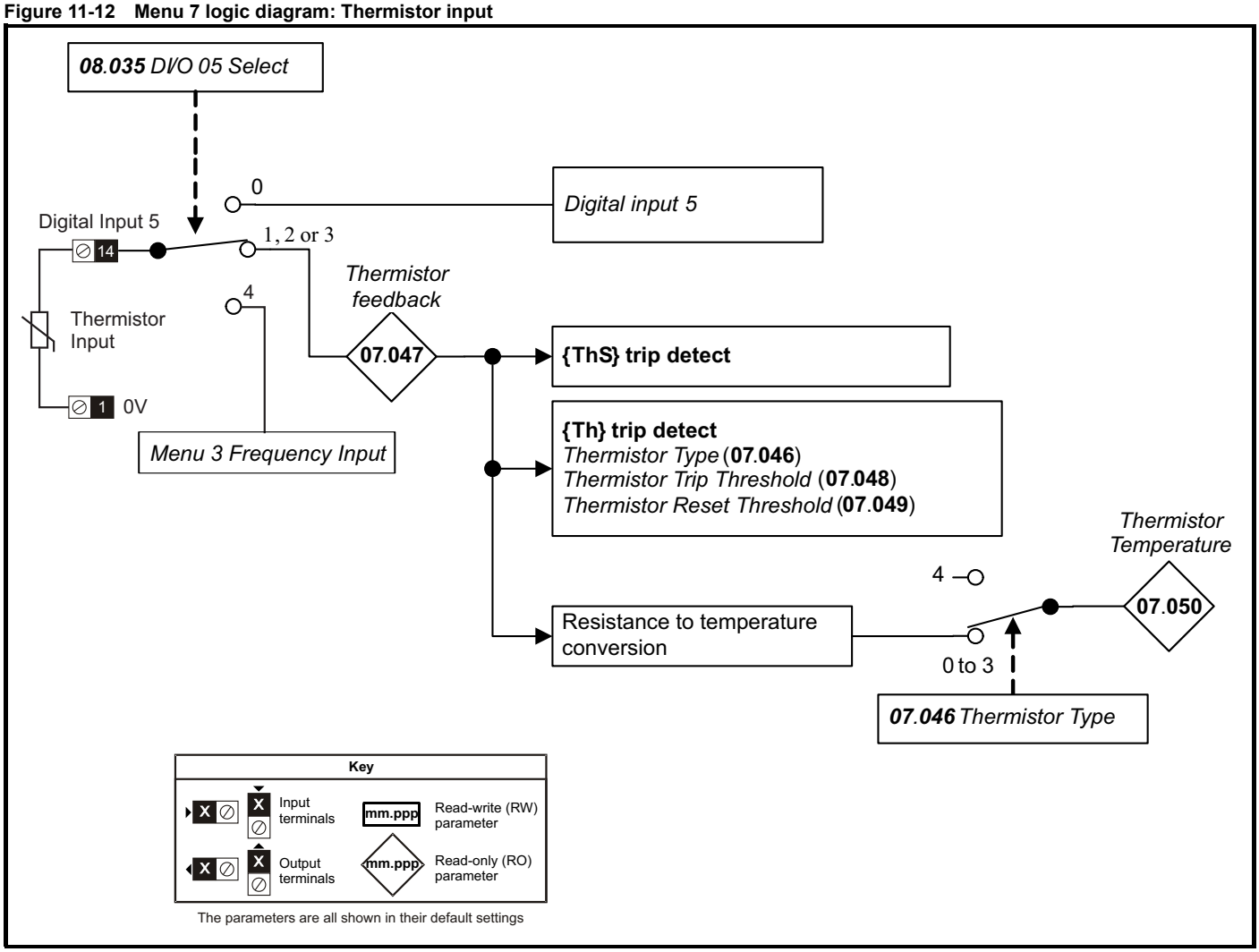

Parameter		Range (⇕)		Default (⇨)		Type					
		OL	RFC-A	OL	RFC-A						
07.001	Analog Input 1 (T2)	0.00 to 100.00 %				RO	Num	ND	NC	PT	FI
07.002	Analog Input 2 (T5)	0.00 to 100.00 %				RO	Num	ND	NC	PT	FI
07.004	Stack Temperature	± 250 °C				RO	Num	ND	NC	PT	
07.005	Auxiliary Temperature	± 250 °C				RO	Num	ND	NC	PT	
07.007	Analog Input 1 Mode (T2)	4-20.S (-6), 20-4.S (-5), 4-20.L (-4), 20-4.L (-3), 4-20.H (-2), 20-4.H (-1), 0-20 (0), 20-0 (1), 4-20.tr (2), 20-4.tr (3), 4-20 (4), 20-4 (5), VoLt (6)		VoLt (6)		RW	Txt				US
07.008	Analog Input 1 Scaling (T2)	0.000 to 10.000		1.000		RW	Num				US
07.009	Analog Input 1 Invert (T2)	Off (0) or On (1)		Off (0)		RW	Bit				US
07.010	Analog Input 1 Destination A (T2)	0.000 to 30.999		1.036		RW	Num	DE		PT	US
07.011	Analog Input 2 Mode (T5)	VoLt (6), dIg (7)		VoLt (6)		RW	Txt				US
07.012	Analog Input 2 Scaling (T5)	0.000 to 10.000		1.000		RW	Num				US
07.013	Analog Input 2 Invert (T5)	Off (0) or On (1)		Off (0)		RW	Bit				US
07.014	Analog Input 2 Destination A (T5)	0.000 to 30.999		1.037		RW	Num	DE		PT	US
07.019	Analog Output 1 Source A (T7)	0.000 to 30.999		2.001		RW	Num			PT	US
07.020	Analog Output 1 Scaling (T7)	0.000 to 40.000		1.000		RW	Num				US
07.026	Analog Input 1 Preset on Current Loss (T2)	4.00 to 20.00		4.00		RW	Num				US
07.028	Analog Input 1 Current Loop Loss (T2)	Off (0) or On (1)				RO	Bit	ND	NC	PT	
07.030	Analog Input 1 Offset (T2)	± 100.00 %		0.00 %		RW	Num				US
07.031	Analog Input 2 Offset (T5)	± 100.00 %		0.00 %		RW	Num				US
07.034	Inverter Temperature	± 250 °C				RO	Num	ND	NC	PT	
07.035	Percentage Of d.c. Link Thermal Trip Level	0 to 100 %				RO	Num	ND	NC	PT	
07.036	Percentage Of Drive Thermal Trip Level	0 to 100 %				RO	Num	ND	NC	PT	
07.037	Temperature Nearest To Trip Level	0 to 1999				RO	Num	ND	NC	PT	
07.046	Thermistor Type	d44081 (0), 84 (1), Pt1000 (2), Pt2000 (3), othEr (4)		d44081 (0)		RW	Txt				US
07.047	Thermistor Feedback	0 to 4000 Ω				RO	Num	ND	NC	PT	FI
07.048	Thermistor Trip Threshold	0 to 4000 Ω		3300 Ω		RW	Num				US
07.049	Thermistor Reset Threshold	0 to 4000 Ω		1800 Ω		RW	Num				US
07.050	Thermistor Temperature	-50 to 300 °C				RO	Num	ND	NC	PT	FI
07.051	Analog Input 1 Control (T2)	0 to 5		0		RW	Num				US
07.052	Analog Input 2 Control (T5)	0 to 5		0		RW	Num				US
07.055	Analog Output 1 Control (T7)	0 to 15		0		RW	Num				US
07.061	Analog Input 1 Minimum Reference (T2)	0.00 to 100.00 %		0.00 %		RW	Num				US
07.062	Analog Input 1 At Minimum Reference (T2)	± 100.00 %		0.00 %		RW	Num				US
07.063	Analog Input 1 Maximum Reference (T2)	0.00 to 100.00 %		100.00 %		RW	Num				US
07.064	Analog Input 1 At Maximum Reference (T2)	± 100.00 %		100.00 %		RW	Num				US
07.065	Analog Input 2 Minimum Reference (T5)	0.00 to 100.00 %		0.00 %		RW	Num				US
07.066	Analog Input 2 At Minimum Reference (T5)	± 100.00 %		0.00 %		RW	Num				US
07.067	Analog Input 2 Maximum Reference (T5)	0.00 to 100.00 %		100.00 %		RW	Num				US
07.068	Analog Input 2 At Maximum Reference (T5)	± 100.00 %		100.00 %		RW	Num				US
07.090	Analog Input 1 Destination B (T2)	0.000 to 30.999				RO	Num	DE		PT	US
07.094	Analog Input 2 Destination B (T5)	0.000 to 30.999				RO	Num	DE		PT	US
07.099	Analog Output 1 Source B (T7)	0.000 to 30.999				RO	Num			PT	US

RW	Read / Write	RO	Read only	Num	Number parameter	Bit	Bit parameter	Txt	Text string	Bin	Binary parameter	FI	Filtered
ND	No default value	NC	Not copied	PT	Protected parameter	RA	Rating dependent	US	User save	PS	Power-down save	DE	Destination

11.9 Menu 8: Digital I/O

Figure 11-13 Menu 8 logic diagram

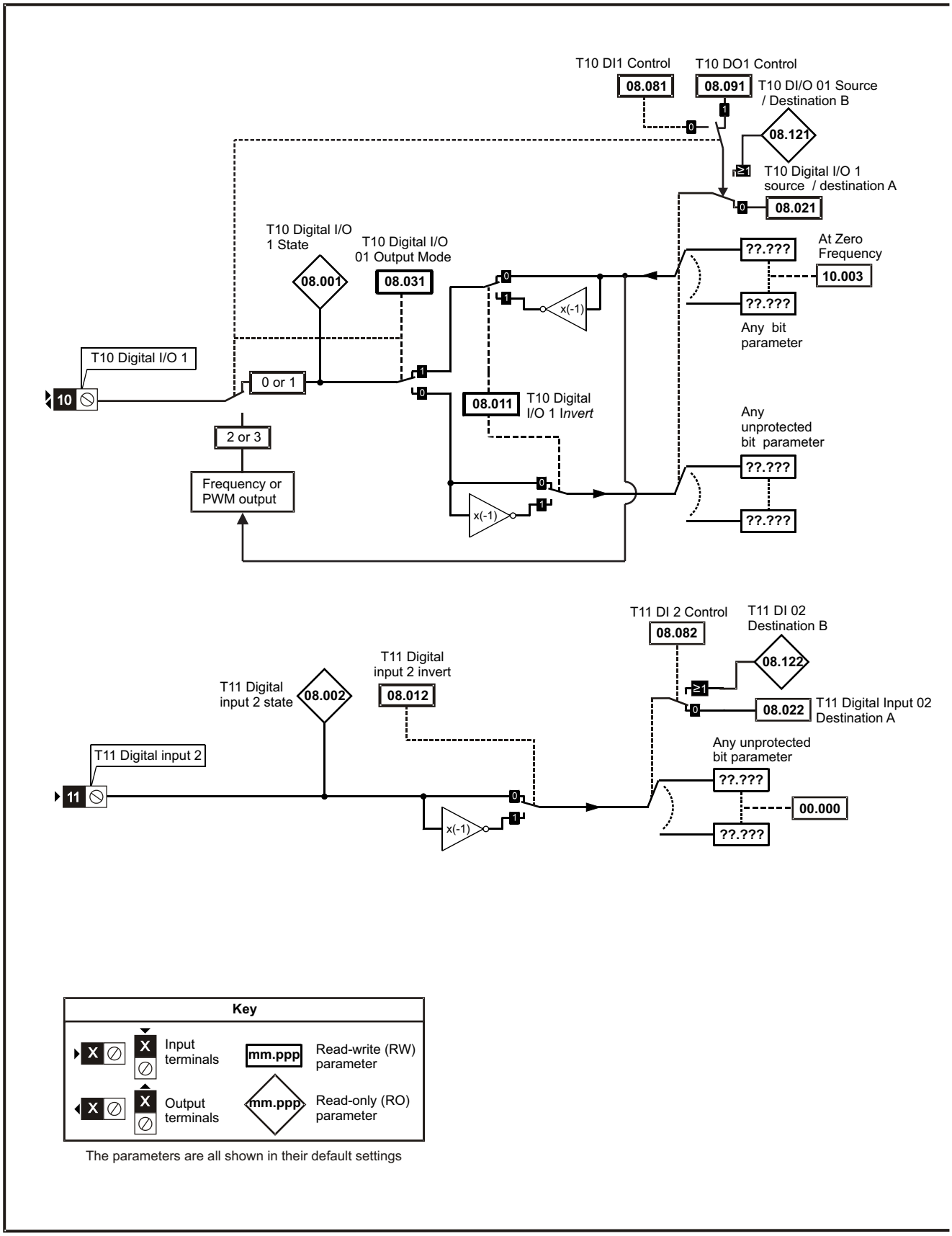

The parameters are all shown in their default settings

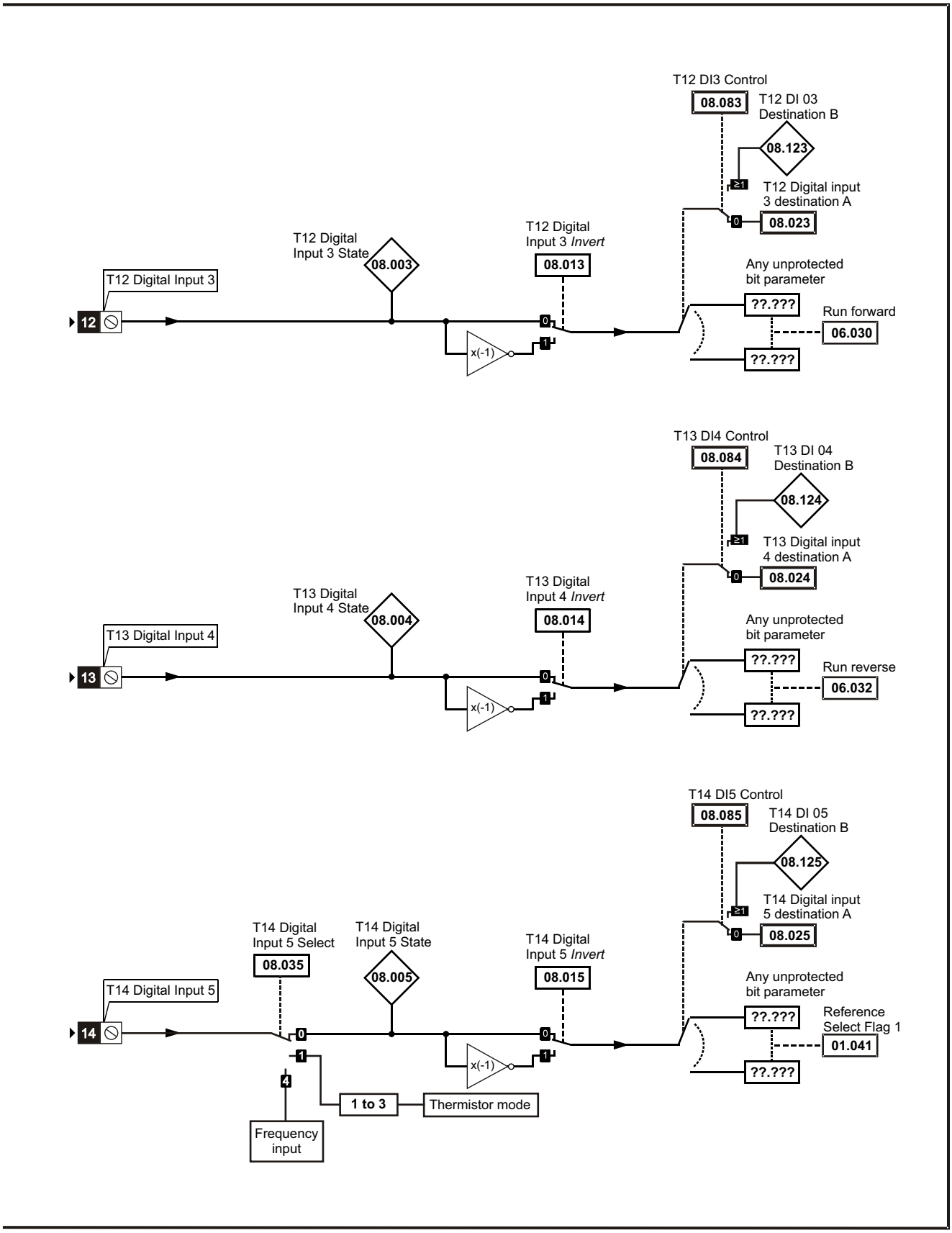
T12 DI3 Control
08.083
T12 DI 03 Destination B
08.123
≥1
T12 Digital input 3 destination A
0
08.023
T12 Digital Input 3 State
08.003
T12 Digital Input 3 Invert
08.013
T12 Digital Input 3
12
Any unprotected bit parameter
??.???
Run forward
06.030
??.???
x(-1)
T13 DI4 Control
08.084
T13 DI 04 Destination B
08.124
≥1
T13 Digital input 4 destination A
0
08.024
T13 Digital Input 4 State
08.004
T13 Digital Input 4 Invert
08.014
T13 Digital Input 4
13
Any unprotected bit parameter
??.???
Run reverse
06.032
??.???
x(-1)
T14 DI5 Control
08.085
T14 DI 05 Destination B
08.125
≥1
T14 Digital input 5 destination A
0
08.025
T14 Digital Input 5 Select
08.035
T14 Digital Input 5 State
08.005
T14 Digital Input 5 Invert
08.015
T14 Digital Input 5
14
Any unprotected bit parameter
??.???
Reference Select Flag 1
01.041
??.???
x(-1)
4
1 to 3
Thermistor mode
Frequency input

Figure 11-14 Menu 8 logic (relay)

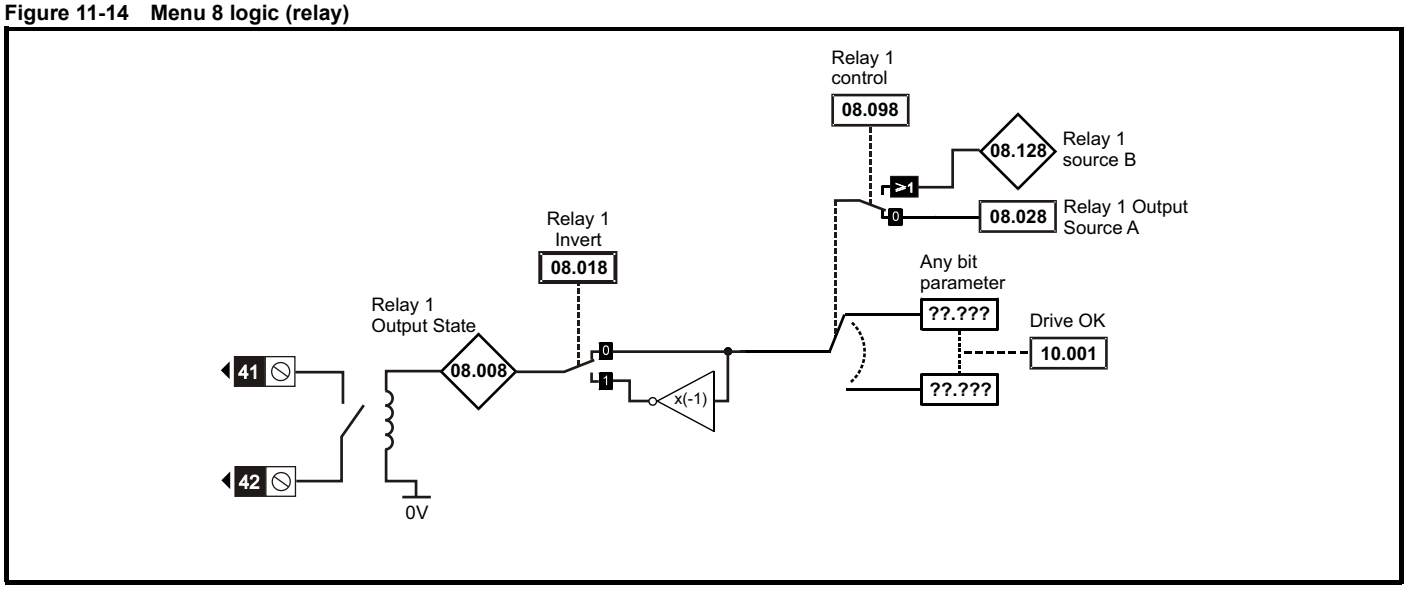

Figure 11-15 Safe Torque Off Logic diagram (frame 1 to 4)

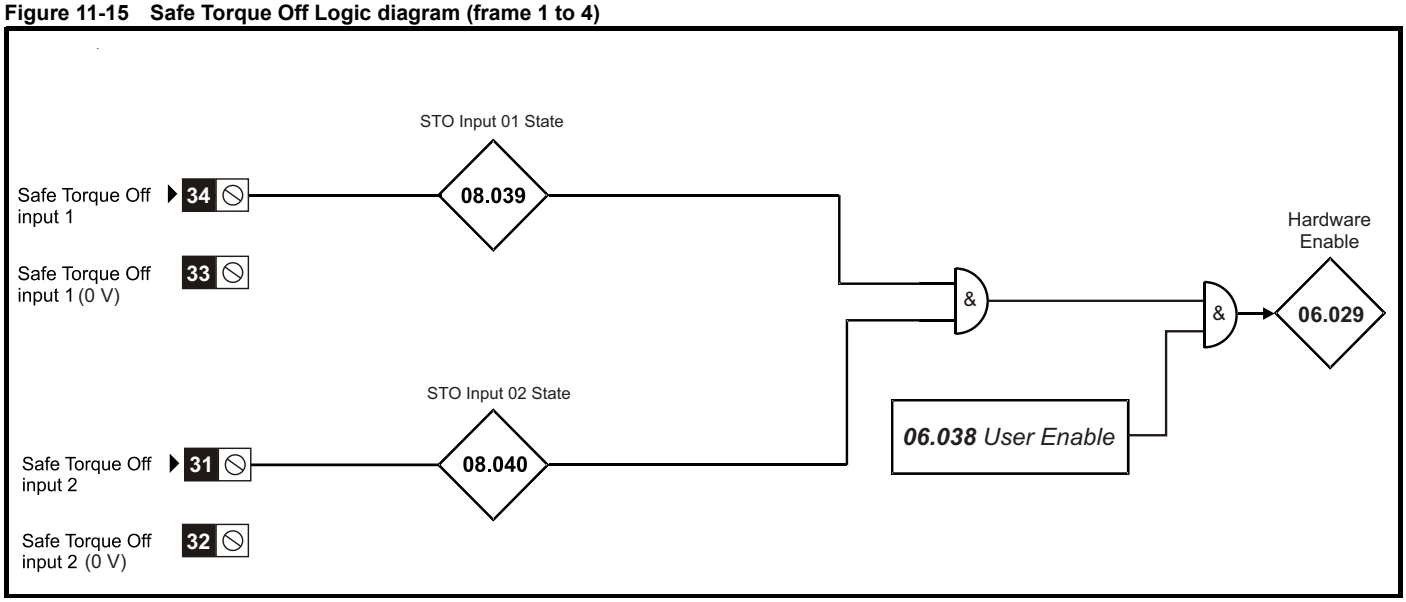

Figure 11-16 Safe Torque Off Logic diagram (frame 5 to 9)

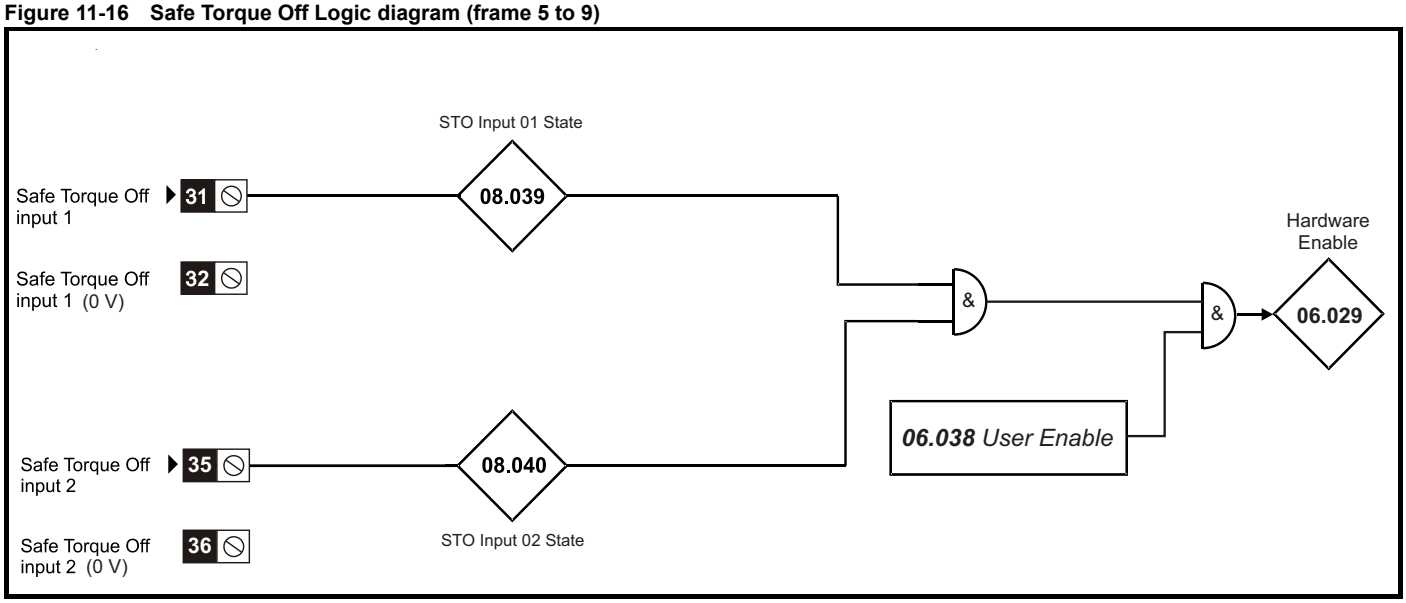

Figure 11-17 Menu 8 logic (Remote Keypad RTC)

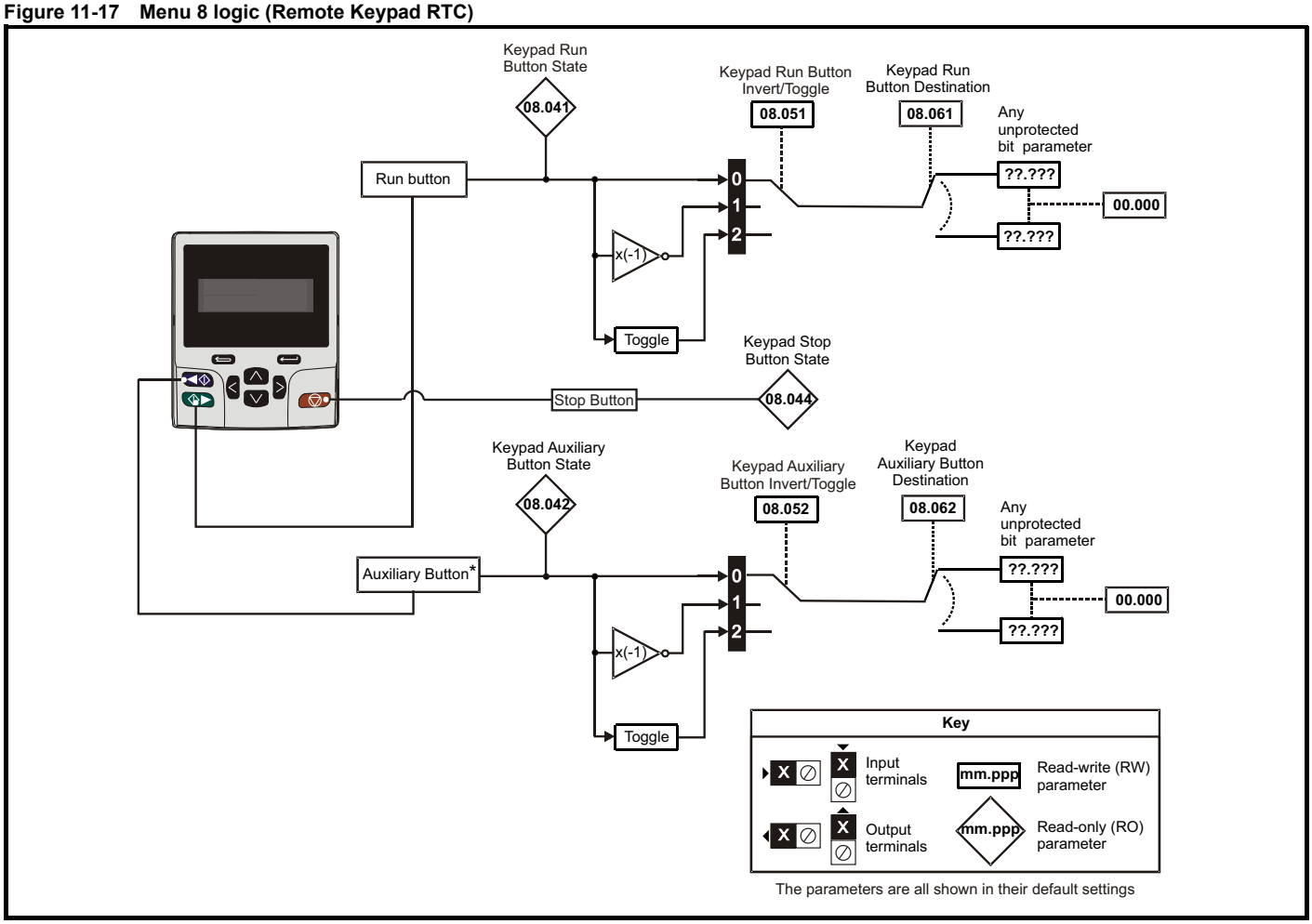

* The auxiliary button is available with Remote Keypad RTC.

Parameter		Range (⇕)		Default (⇨)		Type					
		OL	RFC-A	OL	RFC-A						
08.001	Digital I/O 1 State (T10)	Off (0) or On (1)				RO	Bit	ND	NC	PT	
08.002	Digital Input 2 State (T11)	Off (0) or On (1)				RO	Bit	ND	NC	PT	
08.003	Digital Input 3 State (T12)	Off (0) or On (1)				RO	Bit	ND	NC	PT	
08.004	Digital Input 4 State (T13)	Off (0) or On (1)				RO	Bit	ND	NC	PT	
08.005	Digital Input 5 State (T14)	Off (0) or On (1)				RO	Bit	ND	NC	PT	
08.008	Relay 1 Output State	Off (0) or On (1)				RO	Bit	ND	NC	PT	
08.011	Digital I/O 1 Invert (T10)	Not.Inv (0), InvErt (1)		Not.Inv (0)		RW	Txt				US
08.012	Digital Input 2 Invert (T11)	Not.Inv (0), InvErt (1)		Not.Inv (0)		RW	Txt				US
08.013	Digital Input 3 Invert (T12)	Not.Inv (0), InvErt (1)		Not.Inv (0)		RW	Txt				US
08.014	Digital Input 4 Invert (T13)	Not.Inv (0), InvErt (1)		Not.Inv (0)		RW	Txt				US
08.015	Digital Input 5 Invert (T14)	Not.Inv (0), InvErt (1)		Not.Inv (0)		RW	Txt				US
08.018	Relay 1 Invert	Not.Inv (0), InvErt (1)		Not.Inv (0)		RW	Txt				US
08.020	Digital I/O Read Word	0 to 2048				RO	Num	ND	NC	PT	
08.021	Digital IO1 Source / Destination A (T10)	0.000 to 30.999		10.003		RW	Num	DE		PT	US
08.022	Digital Input 02 Destination A (T11)	0.000 to 30.999		0.000		RW	Num	DE		PT	US
08.023	Digital Input 03 Destination A (T12)	0.000 to 30.999		6.030		RW	Num	DE		PT	US
08.024	Digital Input 04 Destination A (T13)	0.000 to 30.999		6.032		RW	Num	DE		PT	US
08.025	Digital Input 05 Destination A (T14)	0.000 to 30.999		1.041		RW	Num	DE		PT	US
08.028	Relay 1 Output Source A	0.000 to 30.999		10.001		RW	Num			PT	US
08.031	Digital I/O 01 Output Mode (T10)	InPut (0), OutPut (1), Fr (2), PuLSE (3)		OutPut (1)		RW	Txt				US
08.035	Digital Input 5 Select (T14)	InPut (0), th.Sct (1), th (2), th.Notr (3), Fr (4)		InPut (0)		RW	Txt				US
08.039	STO Input 01 State	Off (0) or On (1)				RO	Bit	ND	NC	PT	
08.040	STO Input 02 State	Off (0) or On (1)				RO	Bit	ND	NC	PT	
08.041	Keypad Run Button State	Off (0) or On (1)				RO	Bit	ND	NC	PT	
08.042	Keypad Auxiliary Button State	Off (0) or On (1)				RO	Bit	ND	NC	PT	

08.043	24 V Supply Input State	Off (0) or On (1)		RO	Bit	ND	NC	PT	
08.044	Keypad Stop Button State	Off (0) or On (1)		RO	Bit	ND	NC	PT	
08.051	Keypad Run Button Invert / Toggle	Not.Inv (0), InvErt (1), toggLE (2)	Not.Inv (0)	RW	Txt				US
08.052	Keypad Auxiliary Button Invert / Toggle	Not.Inv (0), InvErt (1), toggLE (2)	Not.Inv (0)	RW	Txt				US
08.053	24 V Supply Input Invert	Not.Inv (0), InvErt (1),	Not.Inv (0)	RW	Txt				US
08.061	Keypad Run Button Destination	0.000 to 30.999	0.000	RW	Num	DE		PT	US
08.062	Keypad Auxiliary Button Destination	0.000 to 30.999	0.000	RW	Num	DE		PT	US
08.063	24 V Supply Input Destination	0.000 to 30.999	0.000	RW	Num	DE		PT	US
08.081	DI1 Control (T10)	0 to 26	0	RW	Num				US
08.082	DI2 Control (T11)	0 to 26	0	RW	Num				US
08.083	DI3 Control (T12)	0 to 26	0	RW	Num				US
08.084	DI4 Control (T13)	0 to 26	0	RW	Num				US
08.085	DI5 Control (T14)	0 to 26	0	RW	Num				US
08.091	DO1 Control (T10)	0 to 21	0	RW	Num				US
08.098	Relay 1 Control	0 to 21	0	RW	Num				US
08.121	DI/O 01 Source / Destination B (T10)	0.000 to 30.999		RO	Num	DE	NC	PT	US
08.122	DI 02 Destination B (T11)	0.000 to 30.999		RO	Num	DE	NC	PT	US
08.123	DI 03 Destination B (T12)	0.000 to 30.999		RO	Num	DE	NC	PT	US
08.124	DI 04 Destination B (T13)	0.000 to 30.999		RO	Num	DE	NC	PT	US
08.125	DI 05 Destination B (T14)	0.000 to 30.999		RO	Num	DE	NC	PT	US
08.128	Relay 01 Source B	0.000 to 30.999	0.000	RO	Num		NC	PT	US

RW	Read / Write	RO	Read only	Num	Number parameter	Bit	Bit parameter	Txt	Text string	Bin	Binary parameter	FI	Filtered
ND	No default value	NC	Not copied	PT	Protected parameter	RA	Rating dependent	US	User save	PS	Power-down save	DE	Destination

11.10 Menu 9: Programmable logic, motorized pot, binary sum and timers

Figure 11-18 Menu 9 logic diagram: Programmable logic

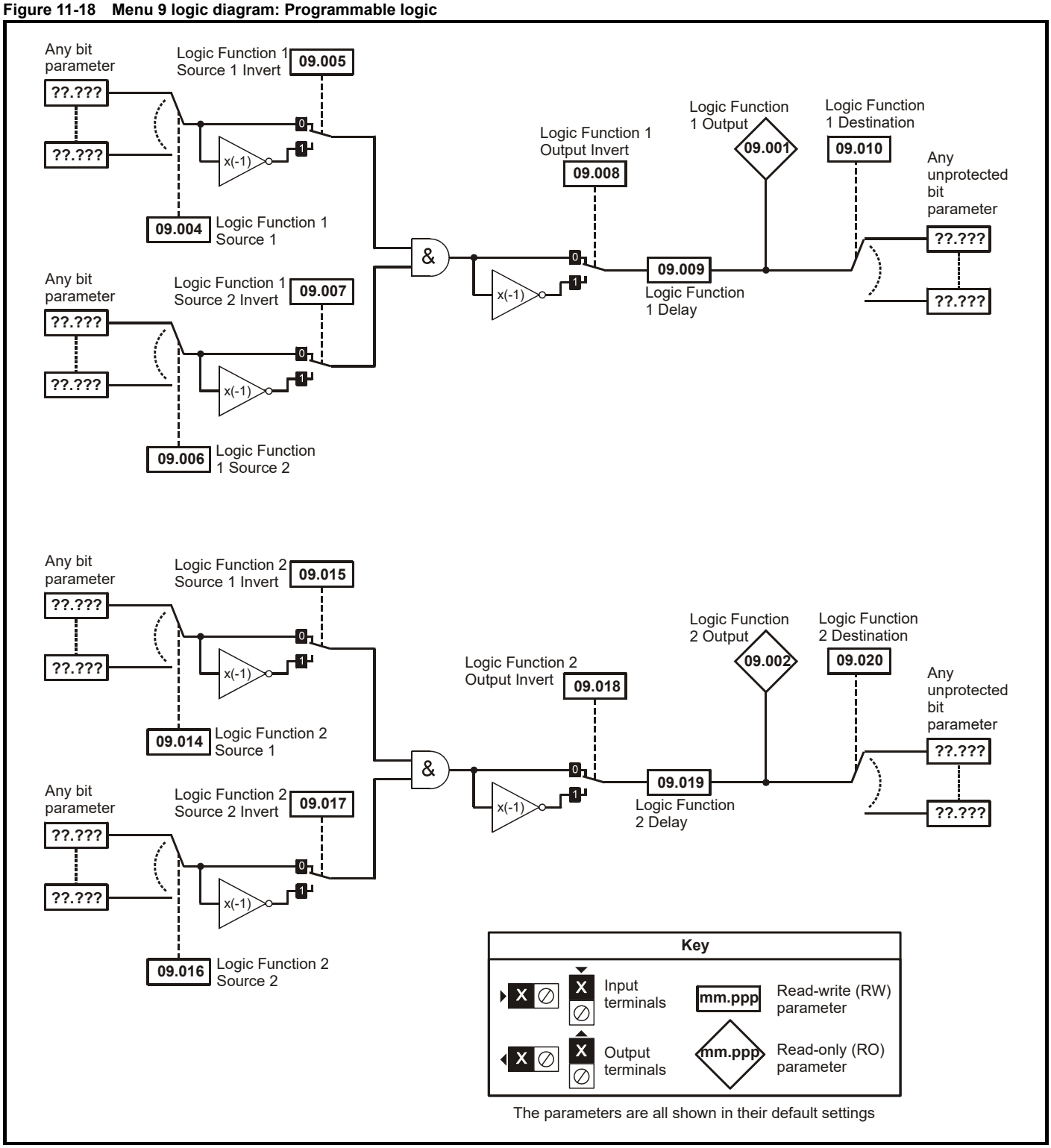

The parameters are all shown in their default settings

Figure 11-19 Menu 9 logic diagram: Motorized pot and binary sum

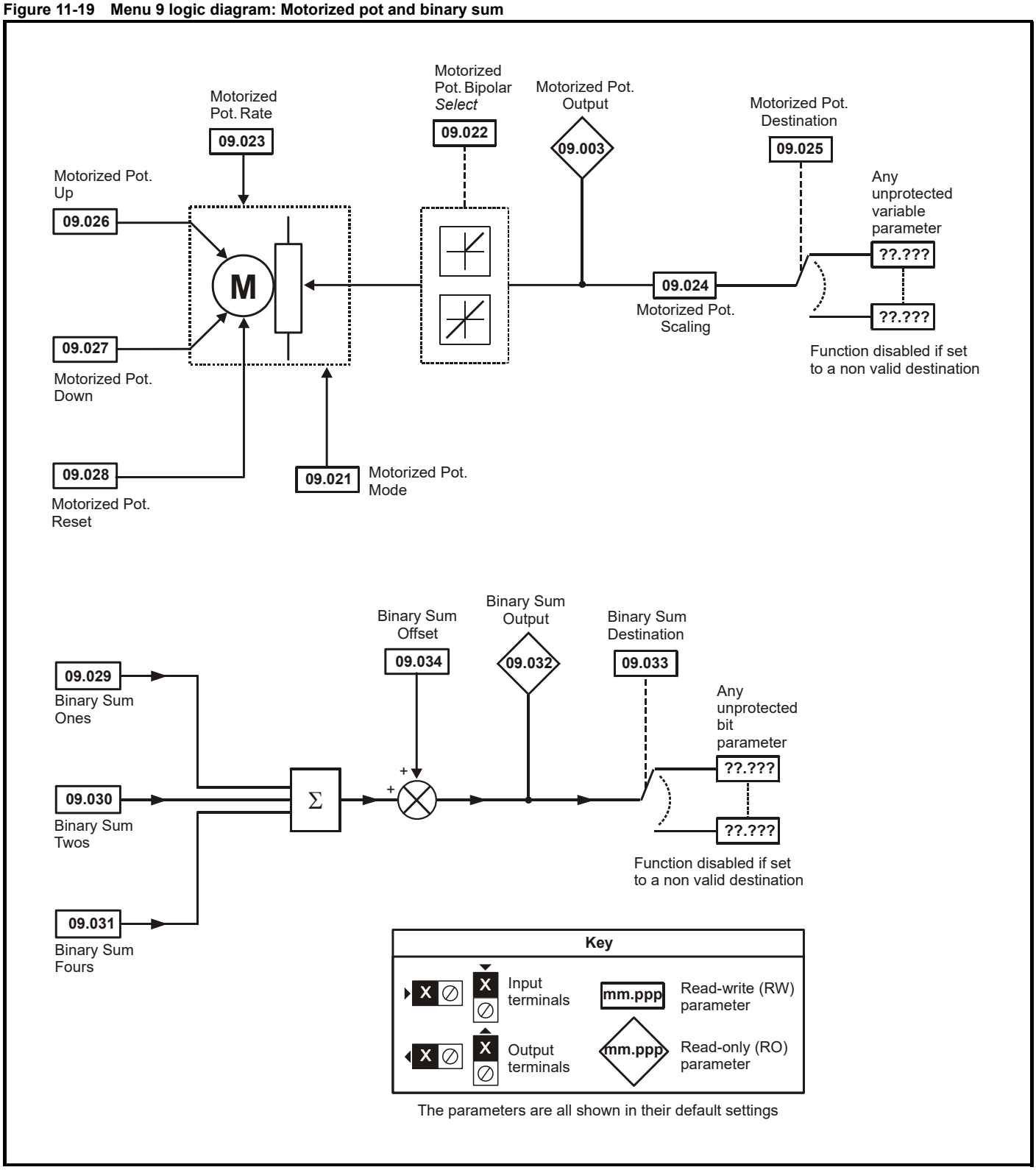

Figure 11-20 Menu 9 logic diagram: Timers

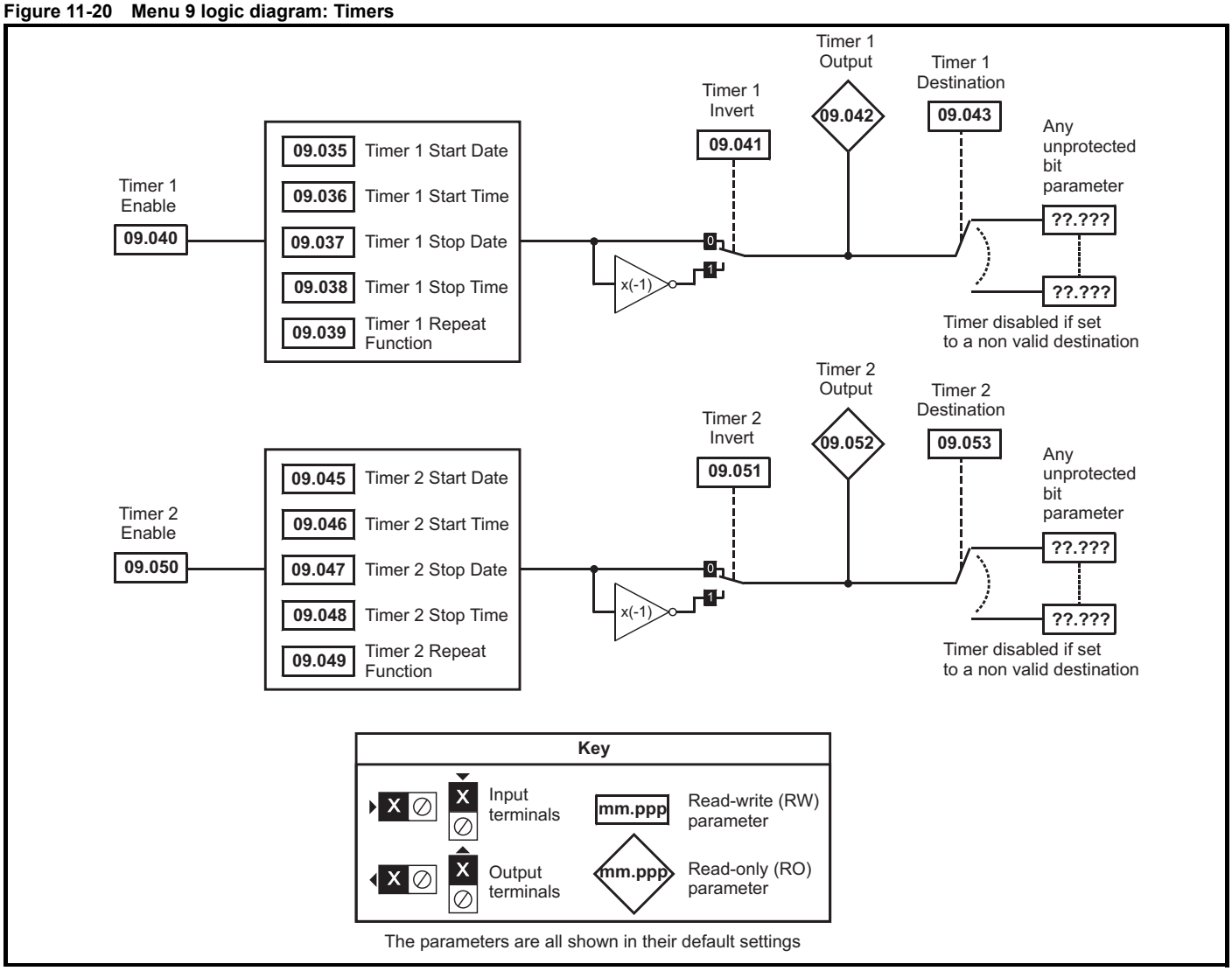

The parameters are all shown in their default settings

Parameter		Range(⇕)		Default(⇨)		Type					
		OL	RFC-A	OL	RFC-A						
09.001	Logic Function 1 Output	Off (0) or On (1)				RO	Bit	ND	NC	PT	
09.002	Logic Function 2 Output	Off (0) or On (1)				RO	Bit	ND	NC	PT	
09.003	Motorized Pot Output	±100.00 %				RO	Num	ND	NC	PT	PS
09.004	Logic Function 1 Source 1	0.000 to 30.999		0.000		RW	Num			PT	US
09.005	Logic Function 1 Source 1 Invert	Off (0) or On (1)		Off (0)		RW	Bit				US
09.006	Logic Function 1 Source 2	0.000 to 30.999		0.000		RW	Num			PT	US
09.007	Logic Function 1 Source 2 Invert	Off (0) or On (1)		Off (0)		RW	Bit				US
09.008	Logic Function 1 Output Invert	Off (0) or On (1)		Off (0)		RW	Bit				US
09.009	Logic Function 1 Delay	±25.0 s		0.0 s		RW	Num				US
09.010	Logic Function 1 Destination	0.000 to 30.999		0.000		RW	Num	DE		PT	US
09.014	Logic Function 2 Source 1	0.000 to 30.999		0.000		RW	Num			PT	US
09.015	Logic Function 2 Source 1 Invert	Off (0) or On (1)		Off (0)		RW	Bit				US
09.016	Logic Function 2 Source 2	0.000 to 30.999		0.000		RW	Num			PT	US
09.017	Logic Function 2 Source 2 Invert	Off (0) or On (1)		Off (0)		RW	Bit				US
09.018	Logic Function 2 Output Invert	Off (0) or On (1)		Off (0)		RW	Bit				US
09.019	Logic Function 2 Delay	±25.0 s		0.0 s		RW	Num				US
09.020	Logic Function 2 Destination	0.000 to 30.999		0.000		RW	Num	DE		PT	US
09.021	Motorized Pot Mode	0 to 4		0		RW	Num				US
09.022	Motorized Pot Bipolar Select	Off (0) or On (1)		Off (0)		RW	Bit				US
09.023	Motorized Pot Rate	0 to 250 s		20 s		RW	Num				US
09.024	Motorized Pot Scaling	0.000 to 4.000		1.000		RW	Num				US
09.025	Motorized Pot Destination	0.000 to 30.999		0.000		RW	Num	DE		PT	US
09.026	Motorized Pot Up	Off (0) or On (1)		Off (0)		RW	Bit		NC		
09.027	Motorized Pot Down	Off (0) or On (1)		Off (0)		RW	Bit		NC		
09.028	Motorized Pot Reset	Off (0) or On (1)		Off (0)		RW	Bit		NC		
09.029	Binary Sum Ones	Off (0) or On (1)		Off (0)		RW	Bit				
09.030	Binary Sum Twos	Off (0) or On (1)		Off (0)		RW	Bit				
09.031	Binary Sum Fours	Off (0) or On (1)		Off (0)		RW	Bit				
09.032	Binary Sum Output	0 to 255				RO	Num	ND	NC	PT	
09.033	Binary Sum Destination	0.000 to 30.999		0.000		RW	Num	DE		PT	US
09.034	Binary Sum Offset	0 to 248		0		RW	Num				US
09.035	Timer 1 Start Date	00-00-00 to 31-12-99		00-00-00		RW	Date				US
09.036	Timer 1 Start Time	00:00:00 to 23:59:59		00:00:00		RW	Time				US
09.037	Timer 1 Stop Date	00-00-00 to 31-12-99		00-00-00		RW	Date				US
09.038	Timer 1 Stop Time	00:00:00 to 23:59:59		00:00:00		RW	Time				US
09.039	Timer 1 Repeat Function	NonE (0), 1 (1), 2 (2), 3 (3), 4 (4), 5 (5), 6 (6), 7 (7)		NonE (0)		RW	Txt				US
09.040	Timer 1 Enable	Off (0) or On (1)		Off (0)		RW	Bit				US
09.041	Timer 1 Invert	Off (0) or On (1)		Off (0)		RW	Bit				US
09.042	Timer 1 Output	Off (0) or On (1)				RO	Bit	ND	NC	PT	
09.043	Timer 1 Destination	0.000 to 30.999		0.000		RW	Num	DE		PT	US
09.045	Timer 2 Start Date	00-00-00 to 31-12-99		00-00-00		RW	Date				US
09.046	Timer 2 Start Time	00:00:00 to 23:59:59		00:00:00		RW	Time				US
09.047	Timer 2 Stop Date	00-00-00 to 31-12-99		00-00-00		RW	Date				US
09.048	Timer 2 Stop Time	00:00:00 to 23:59:59		00:00:00		RW	Time				US
09.049	Timer 2 Repeat Function	NonE (0), 1 (1), 2 (2), 3 (3), 4 (4), 5 (5), 6 (6), 7 (7)		NonE (0)		RW	Txt				US
09.050	Timer 2 Enable	Off (0) or On (1)		Off (0)		RW	Bit				US
09.051	Timer 2 Invert	Off (0) or On (1)		Off (0)		RW	Bit				US
09.052	Timer 2 Output	Off (0) or On (1)				RO	Bit	ND	NC	PT	
09.053	Timer 2 Destination	0.000 to 30.999		0.000		RW	Num	DE		PT	US

RW	Read / Write	RO	Read only	Num	Number parameter	Bit	Bit parameter	Txt	Text string	Bin	Binary parameter	FI	Filtered
ND	No default value	NC	Not copied	PT	Protected parameter	RA	Rating dependent	US	User save	PS	Power-down save	DE	Destination
IP	IP address	Mac	Mac address	Date	Date parameter	Time	Time parameter	SMP	Slot,menu,parameter	Chr	Character parameter	Ver	Version number

11.11 Menu 10: Status and trips

Parameter		Range (⇕)		Default (⇨)		Type					
		OL	RFC-A	OL	RFC-A						
10.001	Drive OK	Off (0) or On (1)				RO	Bit	ND	NC	PT	
10.002	Drive Active	Off (0) or On (1)				RO	Bit	ND	NC	PT	
10.003	Zero Frequency	Off (0) or On (1)				RO	Bit	ND	NC	PT	
10.004	Running At Or Below Minimum Frequency	Off (0) or On (1)				RO	Bit	ND	NC	PT	
10.005	Below Set Frequency	Off (0) or On (1)				RO	Bit	ND	NC	PT	
10.006	At Frequency	Off (0) or On (1)				RO	Bit	ND	NC	PT	
10.007	Above Set Frequency	Off (0) or On (1)				RO	Bit	ND	NC	PT	
10.008	Rated Load Reached	Off (0) or On (1)				RO	Bit	ND	NC	PT	
10.009	Current Limit Active	Off (0) or On (1)				RO	Bit	ND	NC	PT	
10.010	Regenerating	Off (0) or On (1)				RO	Bit	ND	NC	PT	
10.011	Braking IGBT Active	Off (0) or On (1)				RO	Bit	ND	NC	PT	
10.012	Braking Resistor Alarm	Off (0) or On (1)				RO	Bit	ND	NC	PT	
10.013	Reverse Direction Commanded	Off (0) or On (1)				RO	Bit	ND	NC	PT	
10.014	Reverse Direction Running	Off (0) or On (1)				RO	Bit	ND	NC	PT	
10.015	Supply Loss	Off (0) or On (1)				RO	Bit	ND	NC	PT	
10.016	Under Voltage Active	Off (0) or On (1)				RO	Bit	ND	NC	PT	
10.017	Motor Overload Alarm	Off (0) or On (1)				RO	Bit	ND	NC	PT	
10.018	Drive Over-temperature Alarm	Off (0) or On (1)				RO	Bit	ND	NC	PT	
10.019	Drive Warning	Off (0) or On (1)				RO	Bit	ND	NC	PT	
10.020	Trip 0	0 to 255				RO	Txt	ND	NC	PT	PS
10.021	Trip 1	0 to 255				RO	Txt	ND	NC	PT	PS
10.022	Trip 2	0 to 255				RO	Txt	ND	NC	PT	PS
10.023	Trip 3	0 to 255				RO	Txt	ND	NC	PT	PS
10.024	Trip 4	0 to 255				RO	Txt	ND	NC	PT	PS
10.025	Trip 5	0 to 255				RO	Txt	ND	NC	PT	PS
10.026	Trip 6	0 to 255				RO	Txt	ND	NC	PT	PS
10.027	Trip 7	0 to 255				RO	Txt	ND	NC	PT	PS
10.028	Trip 8	0 to 255				RO	Txt	ND	NC	PT	PS
10.029	Trip 9	0 to 255				RO	Txt	ND	NC	PT	PS
10.030	Braking Resistor Rated Power	0.0 to 99999.9 kW		0.0 kW		RW	Num				US
10.031	Braking Resistor Thermal Time Constant	0.00 to 1500.00 s		0.00 s		RW	Num				US
10.032	External Trip	Off (0) or On (1)		Off (0)		RW	Bit		NC		
10.033	Drive Reset	Off (0) or On (1)		Off (0)		RW	Bit		NC		
10.034	Number Of Auto-reset Attempts	NonE (0), 1 (1), 2 (2), 3 (3), 4 (4), 5 (5),inF (6)		NonE (0)		RW	Txt				US
10.035	Auto-reset Delay	0.0 to 600.0 s		1.0 s		RW	Num				US
10.036	Auto-reset Hold Drive OK	Off (0) or On (1)		Off (0)		RW	Bit				US
10.037	Action On Trip Detection	0 to 31		0		RW	Num				US
10.038	User Trip	0 to 255				RW	Num	ND	NC		
10.039	Braking Resistor Thermal Accumulator	0.0 to 100.0 %				RO	Num	ND	NC	PT	
10.040	Status Word	0 to 32767				RO	Num	ND	NC	PT	
10.041	Trip 0 Date	00-00-00 to 31-12-99				RO	Date	ND	NC	PT	PS
10.042	Trip 0 Time	00:00:00 to 23:59:59				RO	Time	ND	NC	PT	PS
10.043	Trip 1 Date	00-00-00 to 31-12-99				RO	Date	ND	NC	PT	PS
10.044	Trip 1 Time	00:00:00 to 23:59:59				RO	Time	ND	NC	PT	PS
10.045	Trip 2 Date	00-00-00 to 31-12-99				RO	Date	ND	NC	PT	PS
10.046	Trip 2 Time	00:00:00 to 23:59:59				RO	Time	ND	NC	PT	PS
10.047	Trip 3 Date	00-00-00 to 31-12-99				RO	Date	ND	NC	PT	PS
10.048	Trip 3 Time	00:00:00 to 23:59:59				RO	Time	ND	NC	PT	PS
10.049	Trip 4 Date	00-00-00 to 31-12-99				RO	Date	ND	NC	PT	PS
10.050	Trip 4 Time	00:00:00 to 23:59:59				RO	Time	ND	NC	PT	PS
10.051	Trip 5 Date	00-00-00 to 31-12-99				RO	Date	ND	NC	PT	PS
10.052	Trip 5 Time	00:00:00 to 23:59:59				RO	Time	ND	NC	PT	PS
10.053	Trip 6 Date	00-00-00 to 31-12-99				RO	Date	ND	NC	PT	PS
10.054	Trip 6 Time	00:00:00 to 23:59:59				RO	Time	ND	NC	PT	PS
10.055	Trip 7 Date	00-00-00 to 31-12-99				RO	Date	ND	NC	PT	PS
10.056	Trip 7 Time	00:00:00 to 23:59:59				RO	Time	ND	NC	PT	PS
10.057	Trip 8 Date	00-00-00 to 31-12-99				RO	Date	ND	NC	PT	PS
10.058	Trip 8 Time	00:00:00 to 23:59:59				RO	Time	ND	NC	PT	PS
10.059	Trip 9 Date	00-00-00 to 31-12-99				RO	Date	ND	NC	PT	PS
10.060	Trip 9 Time	00:00:00 to 23:59:59				RO	Time	ND	NC	PT	PS
10.061	Braking Resistor Resistance	0.00 to 10000.00 Ω		0.00 Ω		RW	Num				US
10.064	Remote Keypad Battery Low	Off (0) or On (1)				RO	Bit	ND	NC	PT	
10.065	Autotune Active	Off (0) or On (1)				RO	Bit	ND	NC	PT	
10.066	Limit Switch Active	Off (0) or On (1)				RO	Bit	ND	NC	PT	
10.068	Hold Drive Healthy On Under Voltage	Off (0) or On (1)		Off (0)		RW	Bit				US

Parameter		Range (⇕)		Default (⇨)		Type					
		OL	RFC-A	OL	RFC-A						
10.069	Additional Status Bits	0 to 2047				RO	Num	ND	NC	PT	
10.070	Trip 0 Sub-trip Number	0 to 65535				RO	Num	ND	NC	PT	PS
10.071	Trip 1 Sub-trip Number	0 to 65535				RO	Num	ND	NC	PT	PS
10.072	Trip 2 Sub-trip Number	0 to 65535				RO	Num	ND	NC	PT	PS
10.073	Trip 3 Sub-trip Number	0 to 65535				RO	Num	ND	NC	PT	PS
10.074	Trip 4 Sub-trip Number	0 to 65535				RO	Num	ND	NC	PT	PS
10.075	Trip 5 Sub-trip Number	0 to 65535				RO	Num	ND	NC	PT	PS
10.076	Trip 6 Sub-trip Number	0 to 65535				RO	Num	ND	NC	PT	PS
10.077	Trip 7 Sub-trip Number	0 to 65535				RO	Num	ND	NC	PT	PS
10.078	Trip 8 Sub-trip Number	0 to 65535				RO	Num	ND	NC	PT	PS
10.079	Trip 9 Sub-trip Number	0 to 65535				RO	Num	ND	NC	PT	PS
10.080	Stop Motor	Off (0) or On (1)				RO	Bit	ND	NC	PT	
10.081	Phase Loss	Off (0) or On (1)				RO	Bit	ND	NC	PT	
10.090	Drive Ready	Off (0) or On (1)				RO	Bit	ND	NC	PT	
10.101	Drive Status	Inh (0), rdy (1), StoP (2), rES (3), rES (4), S.LoSS (5), rES (6), dc.inJ (7), rES (8), Error (9), ActivE (10), rES (11), rES (12), rES (13), HEAt (14), UU (15)				RO	Txt	ND	NC	PT	
10.102	Trip Reset Source	0 to 1023				RO	Num	ND	NC	PT	PS
10.103	Trip Time Identifier	-2147483648 to 2147483647 ms				RO	Num	ND	NC	PT	
10.104	Active Alarm	NonE (0), br.rES (1), OV.Ld (2), rES (3), d.OV.Ld (4), tuning (5), LS (6), rES (7), rES (8), OPt.AL (9), rES (10), rES (11), rES(12), Lo.AC (13), I.AC.Lt (14), 24.LoSt (15)				RO	Txt	ND	NC	PT	
10.106	Potential Drive Damage Conditions	0 to 3				RO	Bin	ND	NC	PT	PS
10.107	Low AC Alarm	Off (0) or On (1)				RO	Bit	ND	NC	PT	
10.108	Reversed cooling fan detected	Off (0) or On (1)				RO	Bit	ND	NC	PT	

RW	Read / Write	RO	Read only	Num	Number parameter	Bit	Bit parameter	Txt	Text string	Bin	Binary parameter	FI	Filtered
ND	No default value	NC	Not copied	PT	Protected parameter	RA	Rating dependent	US	User save	PS	Power-down save	DE	Destination
IP	IP address	Mac	Mac address	Date	Date parameter	Time	Time parameter	SMP	Slot,menu,parameter	Chr	Character parameter	Ver	Version number

11.12 Menu 11: General drive set-up

Parameter		Range (⇕)		Default (⇨)		Type					
		OL	RFC-A	OL	RFC-A						
11.018	Status Mode Parameter 1	0.000 to 30.999		2.001		RW	Num			PT	US
11.019	Status Mode Parameter 2	0.000 to 30.999		4.020		RW	Num			PT	US
11.020	Reset Serial Communications	Off (0) or On (1)				RW	Bit	ND	NC		
11.021	Customer Defined Scaling	0.000 to 10.000		1.000		RW	Num				US
11.022	Parameter Displayed At Power-up	0.000 to 0.095		0.010		RW	Num			PT	US
11.023	Serial Address	1 to 247		1		RW	Num				US
11.024	Serial Mode	8.2NP (0), 8.1NP (1), 8.1EP (2), 8.1OP (3), 8.2NP E (4), 8.1NP E (5), 8.1EP E (6), 8.1OP E (7), 7.1EP (8), 7.1OP (9), 7.1EP E (10), 7.1OP E (11)		8.2NP (0)		RW	Txt				US
11.025	Serial Baud Rate	600 (1), 1200 (2), 2400 (3), 4800 (4), 9600 (5), 19200 (6), 38400 (7), 57600 (8), 76800 (9), 115200 (10)		19200 (6)		RW	Txt				US
11.026	Minimum Comms Transmit Delay	0 to 250 ms		2 ms		RW	Num				US
11.027	Silent Period	0 to 250 ms		0 ms		RW	Num				US
11.028	Drive Derivative	0 to 255				RO	Num	ND	NC	PT	
11.029	Software Version	00.00.00 to 99.99.99				RO	Ver	ND	NC	PT	
11.030	User Security Code	0 to 9999				RW	Num	ND		PT	US
11.031	User Drive Mode	OPEn.LP (1), rFC-A (2)				RW	Txt	ND	NC	PT	US
11.032	Maximum Heavy Duty Rating	0.00 to Drive HD Current Rating A				RO	Num	ND	NC	PT	
11.033	Drive Rated Voltage	110V (0), 200V (1), 400V (2), 575V (3)				RO	Txt	ND	NC	PT	
11.034	Drive Configuration	AV (0), AI (1), AV.Pr (2), AI.Pr (3), PrESEt (4), PAd (5), PAd.rEF (6), E.Pot (7), torquE (8), Pid (9)		AV (0)*		RW	Txt			PT	US
11.035	Power Software Version	00.00.00 to 99.99.99				RO	Ver	ND	NC	PT	
11.036	NV Media Card File Previously Loaded	0 to 999		0		RO	Num		NC	PT	
11.037	NV Media Card File Number	0 to 999		0		RW	Num				
11.038	NV Media Card File Type	NonE (0), OPEn.LP (1), rFC-A (2)				RO	Txt	ND	NC	PT	
11.039	NV Media Card File Version	0 to 9999				RO	Num	ND	NC	PT	
11.042	Parameter Cloning	NonE (0), rEAd (1), Prog (2), Auto (3), boot (4)		NonE (0)		RW	Txt		NC		US
11.043	Load Defaults	NonE (0), Std (1), US (2)		NonE (0)		RW	Txt		NC		
11.044	User Security Status	LEVEL.1 (0), LEVEL.2 (1), ALL (2), StAtUS (3), no.Acc (4)		LEVEL.1 (0)		RW	Txt	ND		PT	
11.045	Select Motor 2 Parameters	1 (0), 2 (1)		1 (0)		RW	Txt				US
11.046	Defaults Previously Loaded	0 to 2000				RO	Num	ND	NC	PT	US
11.047	Onboard User Program: Enable	Stop (0), Run (1)		Run (1)		RW	Txt				US
11.048	Onboard User Program: Status	-2147483648 to 2147483647				RO	Num	ND	NC	PT	
11.049	Onboard User Program: Programming Events	0 to 65535				RO	Num	ND	NC	PT	
11.050	Onboard User Program: Freewheeling Tasks Per Second	0 to 65535				RO	Num	ND	NC	PT	
11.051	Onboard User Program: Clock Task Time Used	0.0 to 100.0 %				RO	Num	ND	NC	PT	
11.052	Serial Number LS	0 to 999999				RO	Num	ND	NC	PT	
11.053	Serial Number MS	0 to 999999				RO	Num	ND	NC	PT	
11.054	Drive Date Code	0 to 9999				RO	Num	ND	NC	PT	
11.055	Onboard User Program: Clock Task Schedule Rate	0 to 262128				RO	Num	ND	NC	PT	
11.060	Maximum Rated Current	0.0 to 266.0 A				RO	Num	ND	NC	PT	
11.061	Full Scale Current Kc	0.0 to 498.0 A				RO	Num	ND	NC	PT	
11.063	Product Type	0 to 255				RO	Num	ND	NC	PT	
11.064	Product Identifier Characters	300				RO	Chr	ND	NC	PT	
11.065	Frame size and voltage code	0 to 999				RO	Num	ND	NC	PT	
11.066	Power Stage Identifier	0 to 255				RO	Num	ND	NC	PT	
11.067	Control Board Identifier	0 to 255				RO	Num	ND	NC	PT	
11.068	Drive current rating	0 to 2240				RO	Num	ND	NC	PT	
11.070	Core Parameter Database Version	0.00 to 99.99				RO	Num	ND	NC	PT	
11.072	NV Media Card Create Special File	0 to 1		0		RW	Num		NC		
11.073	NV Media Card Type	NonE (0), rES (1), Sd.CArd (2)				RO	Num	ND	NC	PT	
11.075	NV Media Card Read-only Flag	Off (0) or On (1)				RO	Bit	ND	NC	PT	
11.076	NV Media Card Warning Suppression Flag	Off (0) or On (1)				RO	Bit	ND	NC	PT	
11.077	NV Media Card File Required Version	0 to 9999				RW	Num	ND	NC	PT	
11.079	Drive Name Characters 1-4	- - - - (-2147483648) to - - - - (-2147483647)		- - - - (757935405)		RW	Chr			PT	US
11.080	Drive Name Characters 5-8	- - - - (-2147483648) to - - - - (-2147483647)		- - - - (757935405)		RW	Chr			PT	US
11.081	Drive Name Characters 9-12	- - - - (-2147483648) to - - - - (-2147483647)		- - - - (757935405)		RW	Chr			PT	US
11.082	Drive Name Characters 13-16	- - - - (-2147483648) to - - - - (-2147483647)		- - - - (757935405)		RW	Chr			PT	US
11.084	Drive Mode	OPEn.LP (1), rFC-A (2)				RO	Txt	ND	NC	PT	
11.085	Security Status	NonE (0), r.onLy.A (1), StAtUS (2),no.Acc (3)				RO	Txt	ND	NC	PT	PS
11.086	Menu Access Status	LEVEL.1 (0), LEVEL.2 (1), ALL (2)				RO	Txt	ND	NC	PT	PS
11.091	Additional Identifier Characters 1	(-2147483648) to (2147483647)				RO	Chr	ND	NC	PT	
11.092	Additional Identifier Characters 2	(-2147483648) to (2147483647)				RO	Chr	ND	NC	PT	
11.093	Additional Identifier Characters 3	(-2147483648) to (2147483647)				RO	Chr	ND	NC	PT	

Parameter		Range (⇕)		Default (⇨)		Type					
		OL	RFC-A	OL	RFC-A						
11.094	Disable String Mode	Off (0) or On (1)		Off (0)		RW	Bit			PT	US
11.097	AI ID Code	NonE (0), Sd.CArd (1), rS-485 (2), boot (3), rS-485 (4)				RO	Txt	ND	NC	PT	
11.098	24V Alarm Loss Enable	Off (0) or On (1)		Off (0)		RW	Bit				US
11.099	Modbus Parameter Conversion	0000 to 1111		0000		RW	Bin				US

RW	Read / Write	RO	Read only	Num	Number parameter	Bit	Bit parameter	Txt	Text string	Bin	Binary parameter	FI	Filtered
ND	No default value	NC	Not copied	PT	Protected parameter	RA	Rating dependent	US	User save	PS	Power-down save	DE	Destination
IP	IP address	Mac	Mac address	Date	Date parameter	Time	Time parameter	SMP	Slot,menu,parameter	Chr	Character parameter	Ver	Version number

11.13 Menu 12: Threshold detectors, variable selectors and brake control function

Figure 11-21 Menu 12 logic diagram

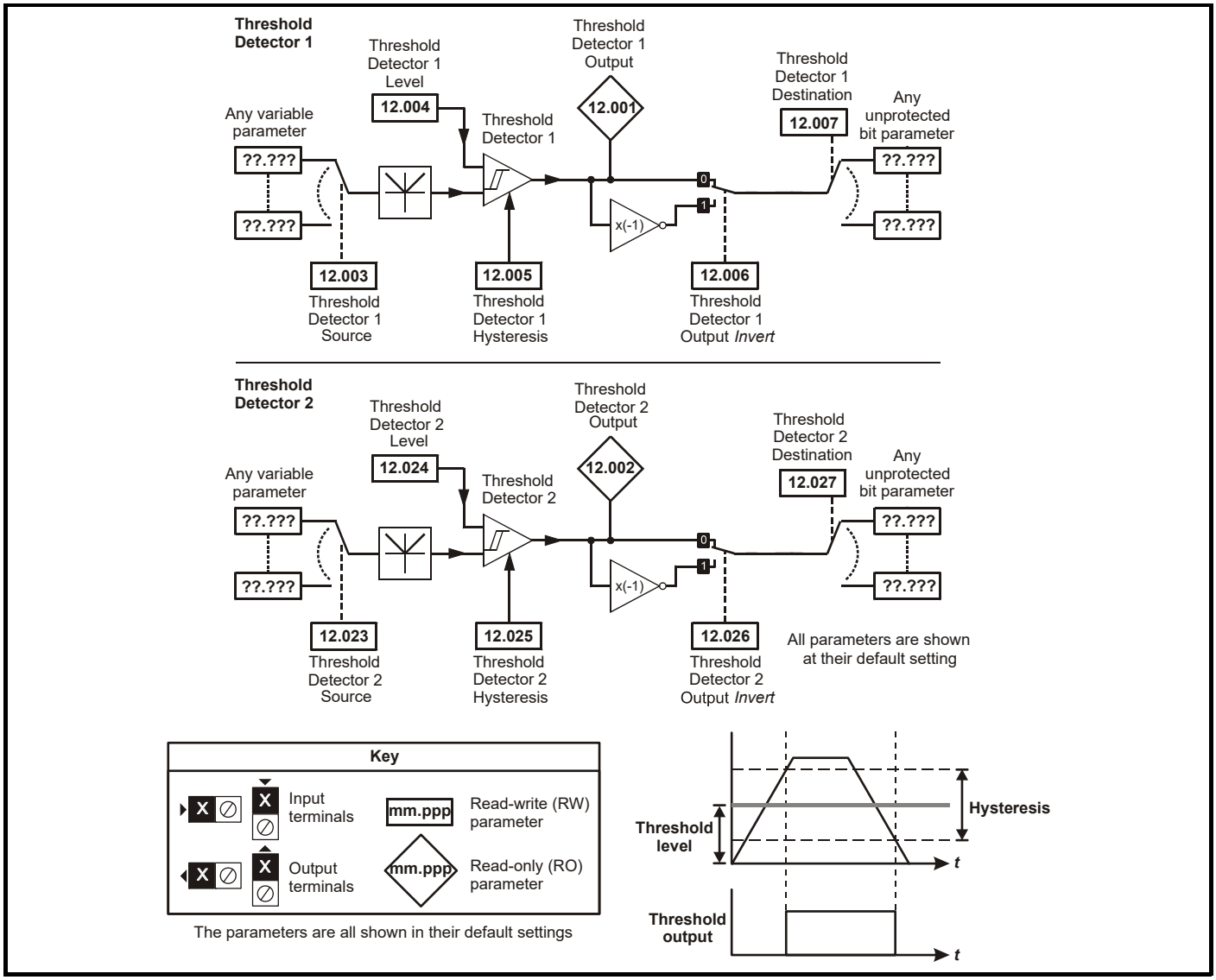

Figure 11-22 Menu 12 logic diagram (continued)

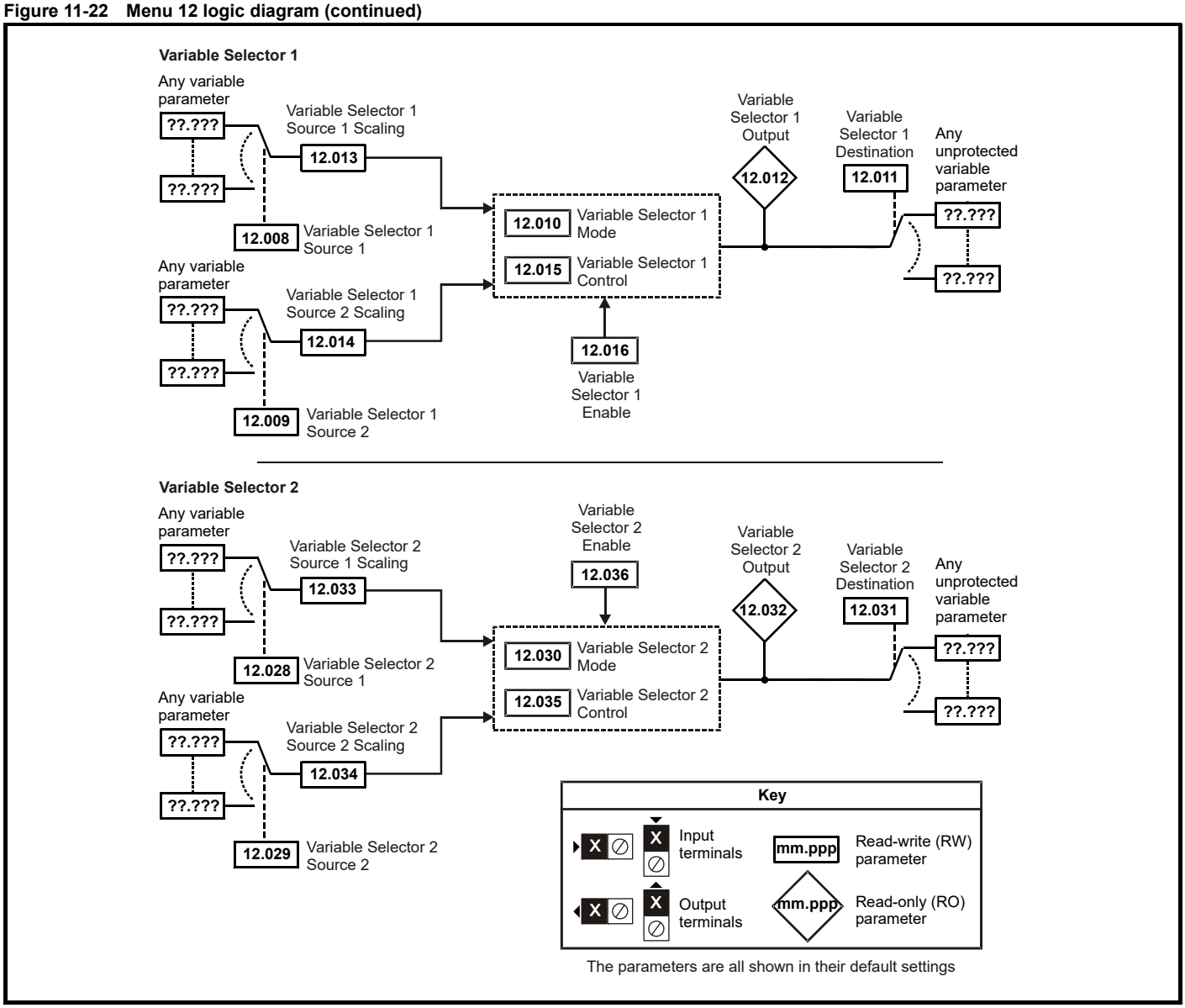

The parameters are all shown in their default settings

WARNING The brake control functions are provided to allow well co-ordinated operation of an external brake with the drive. While both hardware and software are designed to high standards of quality and robustness, they are not intended for use as safety functions, i.e. where a fault or failure would result in a risk of injury. In any application where the incorrect operation of the brake release mechanism could result in injury, independent protection devices of proven integrity must also be incorporated.

WARNING The control terminal relay can be selected as an output to release a brake. If a drive is set up in this manner and a drive replacement takes place, prior to programming the drive on initial power up, the brake may be released.
When drive terminals are programmed to non default settings the result of incorrect or delayed programming must be considered. The use of an NV media card in boot mode can ensure drive parameters are immediately programmed to avoid this situation.

Figure 11-23 Open loop brake function

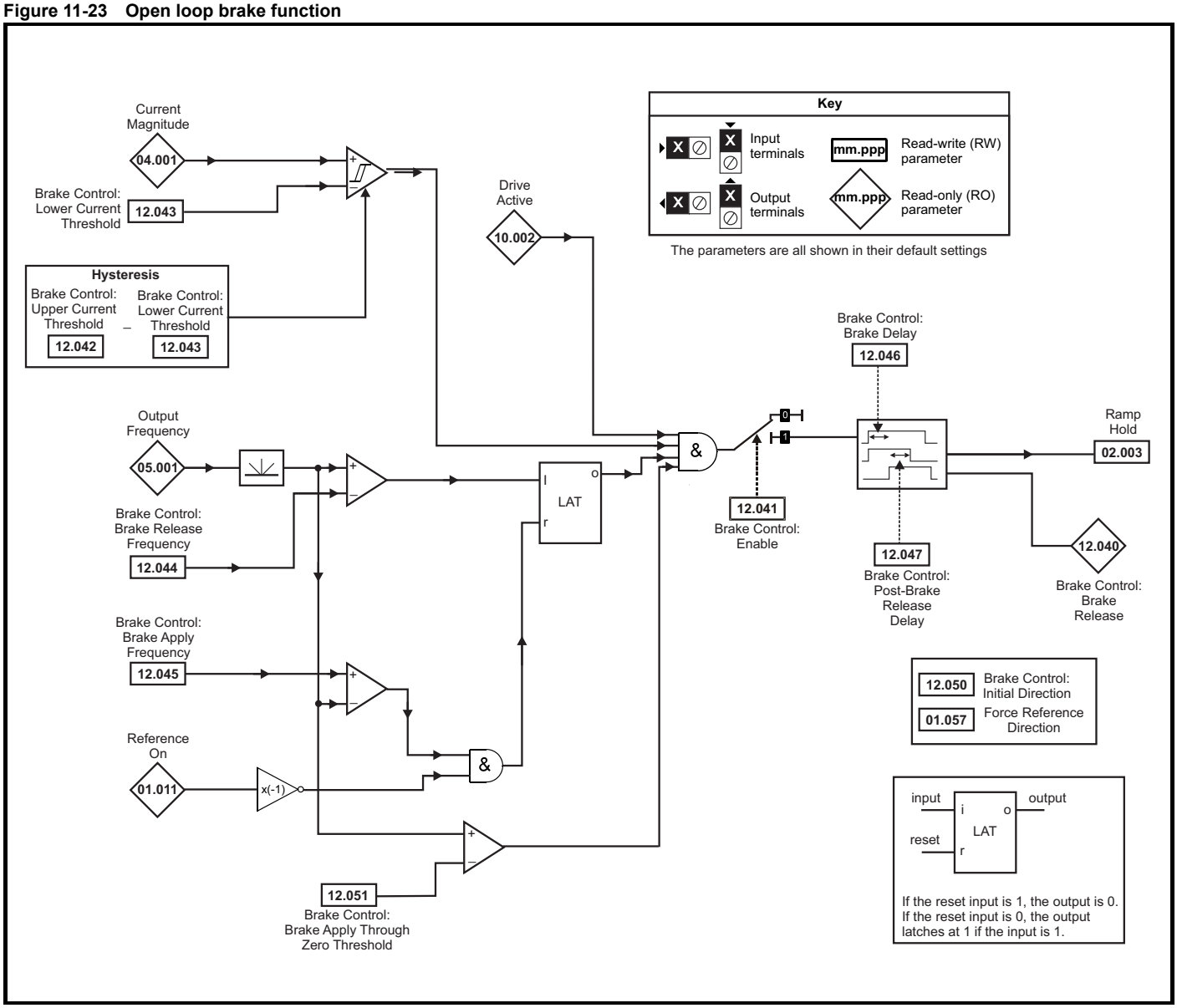

Figure 11-24 Brake sequence

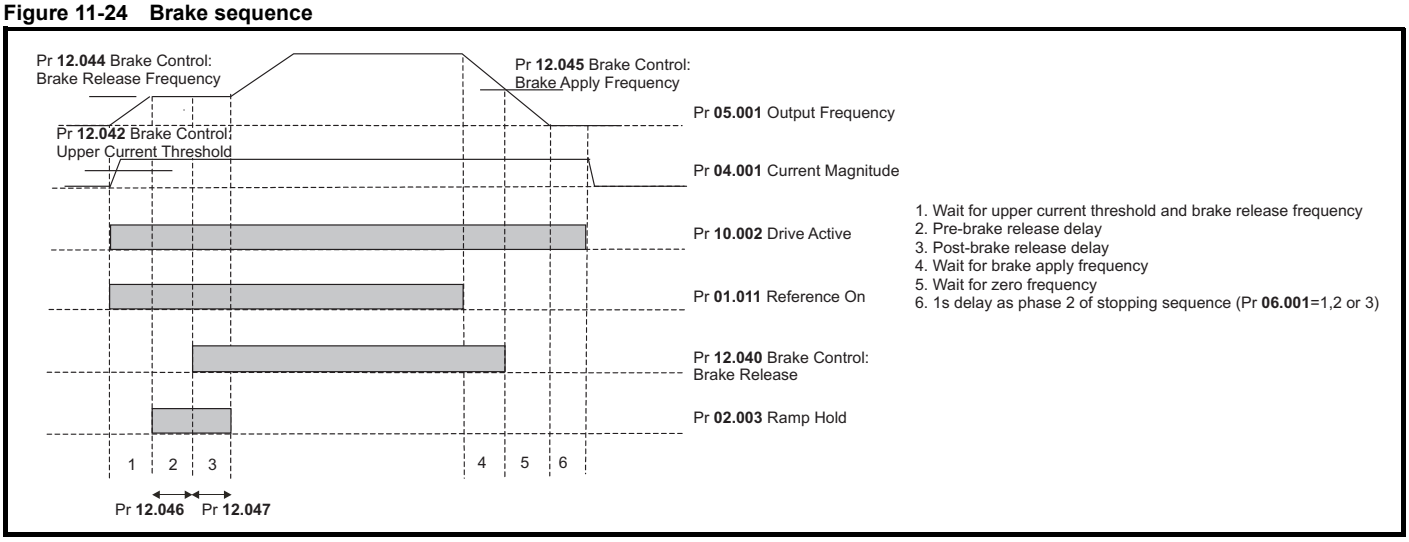

Figure 11-25 RFC-A brake function

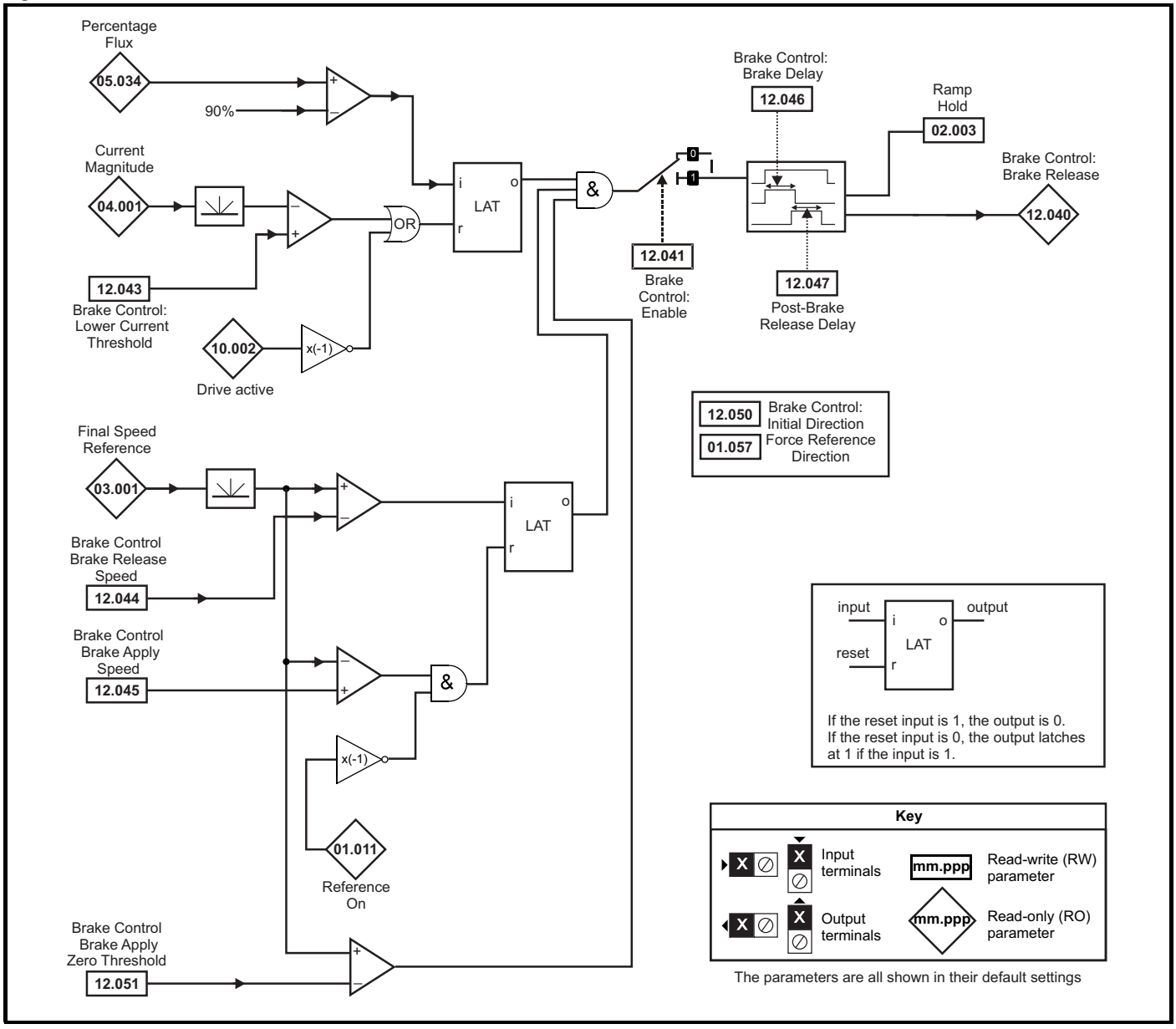

Parameter		Range(⇕)		Default(⇨)		Type					
		OL	RFC-A	OL	RFC-A						
12.001	Threshold Detector 1 Output	Off (0) or On (1)				RO	Bit	ND	NC	PT	
12.002	Threshold Detector 2 Output	Off (0) or On (1)				RO	Bit	ND	NC	PT	
12.003	Threshold Detector 1 Source	0.000 to 30.999		0.000		RW	Num			PT	US
12.004	Threshold Detector 1 Level	0.00 to 100.00 %		0.00 %		RW	Num				US
12.005	Threshold Detector 1 Hysteresis	0.00 to 25.00 %		0.00 %		RW	Num				US
12.006	Threshold Detector 1 Output Invert	Off (0) or On (1)		Off (0)		RW	Bit				US
12.007	Threshold Detector 1 Destination	0.000 to 30.999		0.000		RW	Num	DE		PT	US
12.008	Variable Selector 1 Source 1	0.000 to 30.999		0.000		RW	Num			PT	US
12.009	Variable Selector 1 Source 2	0.000 to 30.999		0.000		RW	Num			PT	US
12.010	Variable Selector 1 Mode	0 (0), 1 (1), 2 (2), 3 (3), 4 (4), 5 (5), 6 (6), 7 (7), 8 (8), 9 (9)		0 (0)		RW	Txt				US
12.011	Variable Selector 1 Destination	0.000 to 30.999		0.000		RW	Num	DE		PT	US
12.012	Variable Selector 1 Output	±100.00 %				RO	Num	ND	NC	PT	
12.013	Variable Selector 1 Source 1 Scaling	±4.000		1.000		RW	Num				US
12.014	Variable Selector 1 Source 2 Scaling	±4.000		1.000		RW	Num				US
12.015	Variable Selector 1 Control	0.00 to 100.00		0.00		RW	Num				US
12.016	Variable Selector 1 Enable	Off (0) or On (1)		On (1)		RW	Bit				US
12.023	Threshold Detector 2 Source	0.000 to 30.999		0.000		RW	Num			PT	US
12.024	Threshold Detector 2 Level	0.00 to 100.00 %		0.00 %		RW	Num				US
12.025	Threshold Detector 2 Hysteresis	0.00 to 25.00 %		0.00 %		RW	Num				US
12.026	Threshold Detector 2 Output Invert	Off (0) or On (1)		Off (0)		RW	Bit				US
12.027	Threshold Detector 2 Destination	0.000 to 30.999		0.000		RW	Num	DE		PT	US
12.028	Variable Selector 2 Source 1	0.000 to 30.999		0.000		RW	Num			PT	US
12.029	Variable Selector 2 Source 2	0.000 to 30.999		0.000		RW	Num			PT	US
12.030	Variable Selector 2 Mode	0 (0), 1 (1), 2 (2), 3 (3), 4 (4), 5 (5), 6 (6), 7 (7), 8 (8), 9 (9)		0 (0)		RW	Txt				US
12.031	Variable Selector 2 Destination	0.000 to 30.999		0.000		RW	Num	DE		PT	US
12.032	Variable Selector 2 Output	±100.00 %				RO	Num	ND	NC	PT	
12.033	Variable Selector 2 Source 1 Scaling	±4.000		1.000		RW	Num				US
12.034	Variable Selector 2 Source 2 Scaling	±4.000		1.000		RW	Num				US
12.035	Variable Selector 2 Control	0.00 to 100.00		0.00		RW	Num				US
12.036	Variable Selector 2 Enable	Off (0) or On (1)		On (1)		RW	Bit				US
12.040	BC Brake Release	Off (0) or On (1)				RO	Bit	ND	NC	PT	
12.041	BC Enable	diS (0), rELAy (1), dig IO (2), USEr (3)		diS (0)		RW	Txt				US
12.042	BC Upper Current Threshold	0 to 200 %		50 %		RW	Num				US
12.043	BC Lower Current Threshold	0 to 200 %		10 %		RW	Num				US
12.044	BC Brake Release Frequency	0.00 to 20.00 Hz		1.00 Hz		RW	Num				US
12.045	BC Brake Apply Frequency	0.00 to 20.00 Hz		2.00 Hz		RW	Num				US
12.046	BC Brake Delay	0.0 to 25.0 s		1.0 s		RW	Num				US
12.047	BC Post-brake Release Delay	0.0 to 25.0 s		1.0 s		RW	Num				US
12.050	BC Initial Direction	rEf (0), For (1), rEv (2)		rEf (0)		RW	Txt				US
12.051	BC Brake Apply Through Zero Threshold	0.00 to 25.00 Hz		1.00 Hz		RW	Num				US

RW	Read / Write	RO	Read only	Num	Number parameter	Bit	Bit parameter	Txt	Text string	Bin	Binary parameter	FI	Filtered
ND	No default value	NC	Not copied	PT	Protected parameter	RA	Rating dependent	US	User save	PS	Power-down save	DE	Destination

11.14 Menu 14: User PID controller

Figure 11-26 Menu 14 Logic diagram

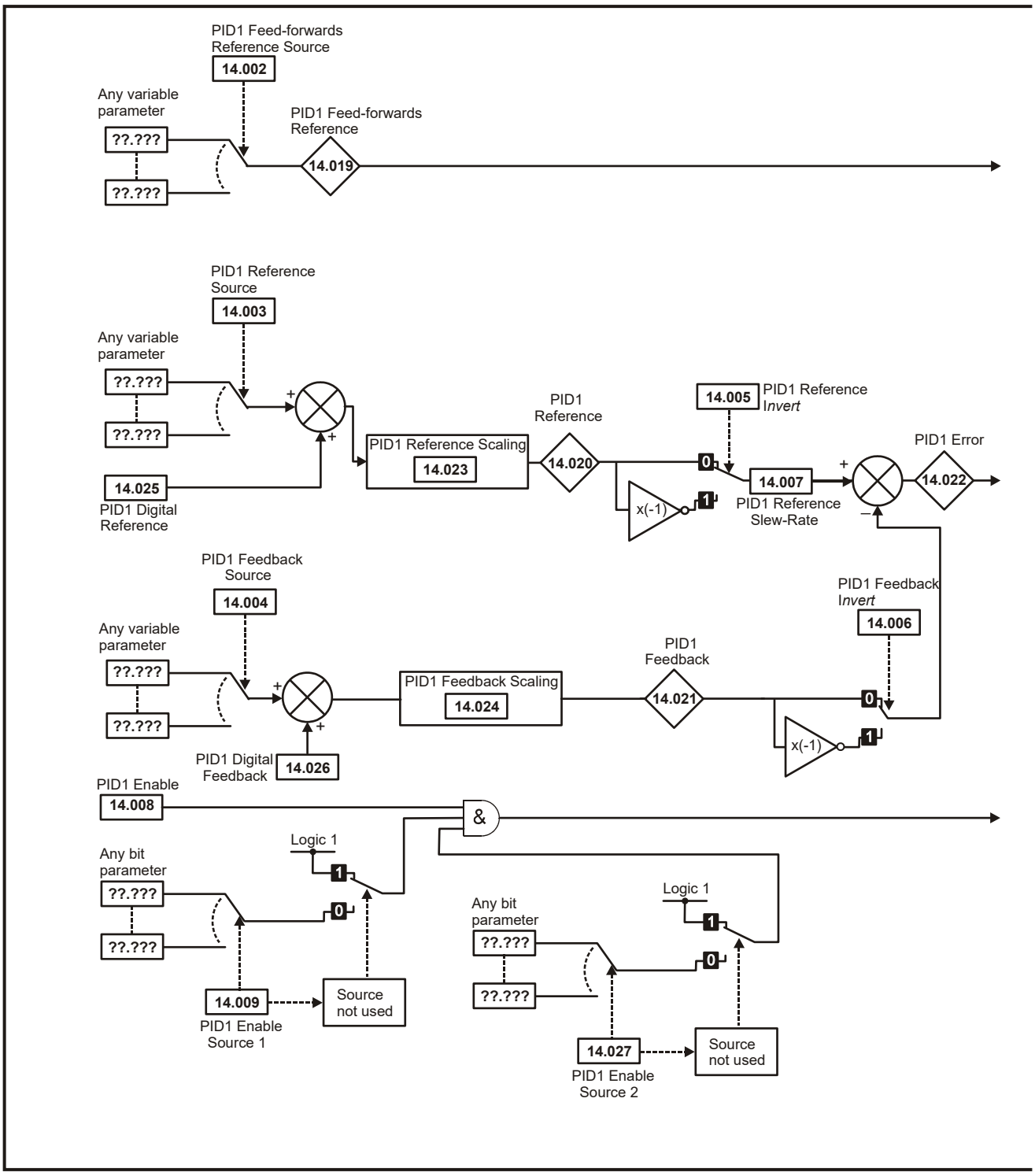

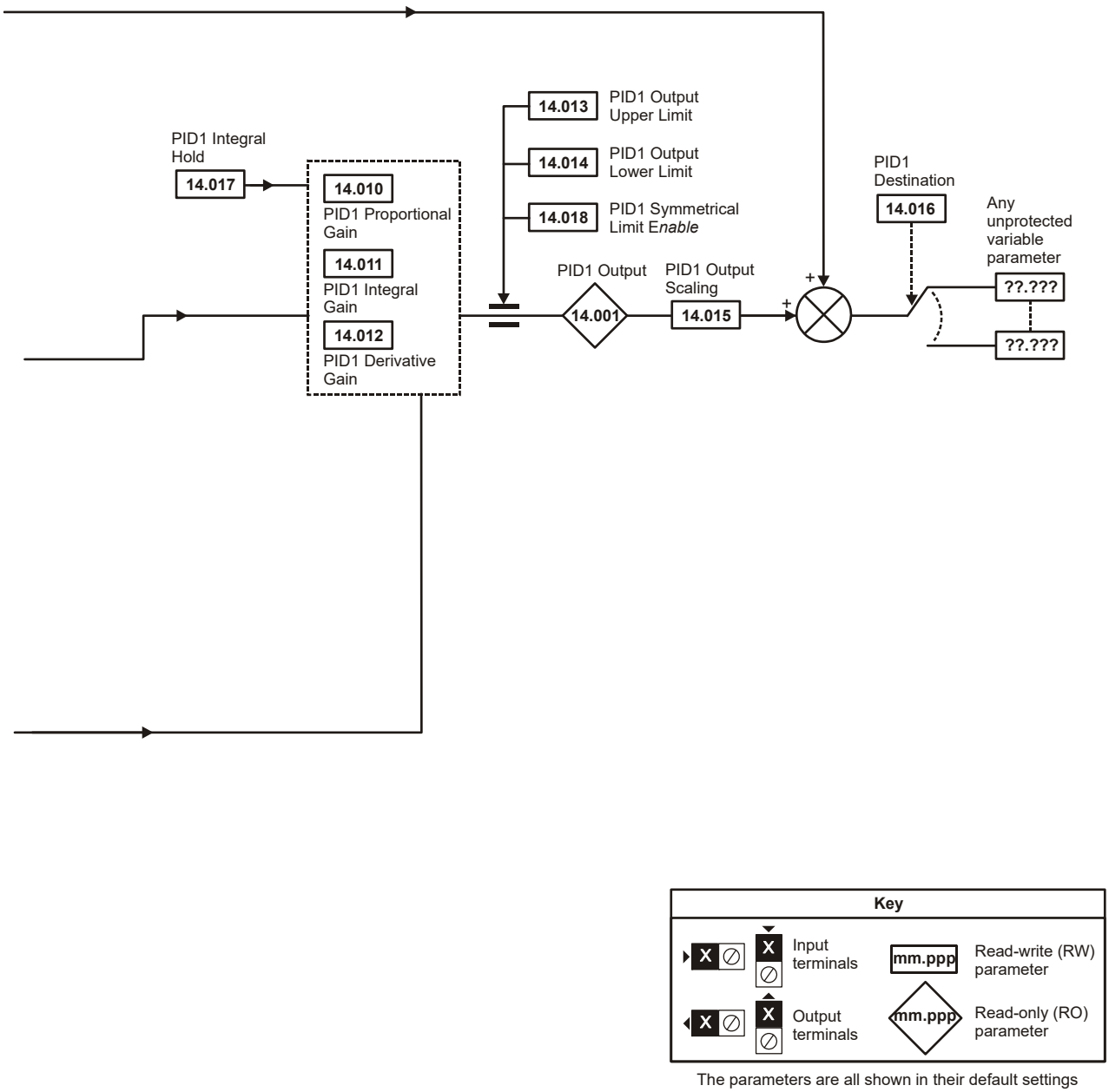

The parameters are all shown in their default settings

Parameter		Range (⇕)		Default (⇨)		Type					
		OL	RFC-A	OL	RFC-A						
14.001	PID1 Output	±100.00 %				RO	Num	ND	NC	PT	
14.002	PID1 Feed-forwards Reference Source	0.000 to 30.999		0.000		RW	Num			PT	US
14.003	PID1 Reference Source	0.000 to 30.999		0.000		RW	Num			PT	US
14.004	PID1 Feedback Source	0.000 to 30.999		0.000		RW	Num			PT	US
14.005	PID1 Reference Invert	Off (0) or On (1)		Off (0)		RW	Bit				US
14.006	PID1 Feedback Invert	Off (0) or On (1)		Off (0)		RW	Bit				US
14.007	PID1 Reference Slew Rate	0.0 to 3200.0 s		0.0 s		RW	Num				US
14.008	PID1 Enable	Off (0) or On (1)		Off (0)		RW	Bit				US
14.009	PID1 Enable Source 1	0.000 to 30.999		0.000		RW	Num			PT	US
14.010	PID1 Proportional Gain	0.000 to 4.000		1.000		RW	Num				US
14.011	PID1 Integral Gain	0.000 to 4.000		0.500		RW	Num				US
14.012	PID1 Differential Gain	0.000 to 4.000		0.000		RW	Num				US
14.013	PID1 Output Upper Limit	0.00 to 100.00 %		100.00 %		RW	Num				US
14.014	PID1 Output Lower Limit	±100.00 %		-100.00 %		RW	Num				US
14.015	PID1 Output Scaling	0.000 to 4.000		1.000		RW	Num				US
14.016	PID1 Destination	0.000 to 30.999		0.000		RW	Num	DE		PT	US
14.017	PID1 Integral Hold	Off (0) or On (1)		Off (0)		RW	Bit				
14.018	PID1 Symmetrical Limit Enable	Off (0) or On (1)		Off (0)		RW	Bit				US
14.019	PID1 Feed-forwards Reference	±100.00 %				RO	Num	ND	NC	PT	
14.020	PID1 Reference	±100.00 %				RO	Num	ND	NC	PT	
14.021	PID1 Feedback	±100.00 %				RO	Num	ND	NC	PT	
14.022	PID1 Error	±100.00 %				RO	Num	ND	NC	PT	
14.023	PID1 Reference Scaling	0.000 to 4.000		1.000		RW	Num				US
14.024	PID1 Feedback Scaling	0.000 to 4.000		1.000		RW	Num				US
14.025	PID1 Digital Reference	±100.00 %		0.00 %		RW	Num				US
14.026	PID1 Digital Feedback	±100.00 %		0.00 %		RW	Num				US
14.027	PID1 Enable Source 2	0.000 to 30.999		0.000		RW	Num			PT	US

RW	Read / Write	RO	Read only	Num	Number parameter	Bit	Bit parameter	Txt	Text string	Bin	Binary parameter	FI	Filtered
ND	No default value	NC	Not copied	PT	Protected parameter	RA	Rating dependent	US	User save	PS	Power-down save	DE	Destination

11.15 Menu 15: Option module set-up

Figure 11-27 Location of option module slot and its corresponding menu number

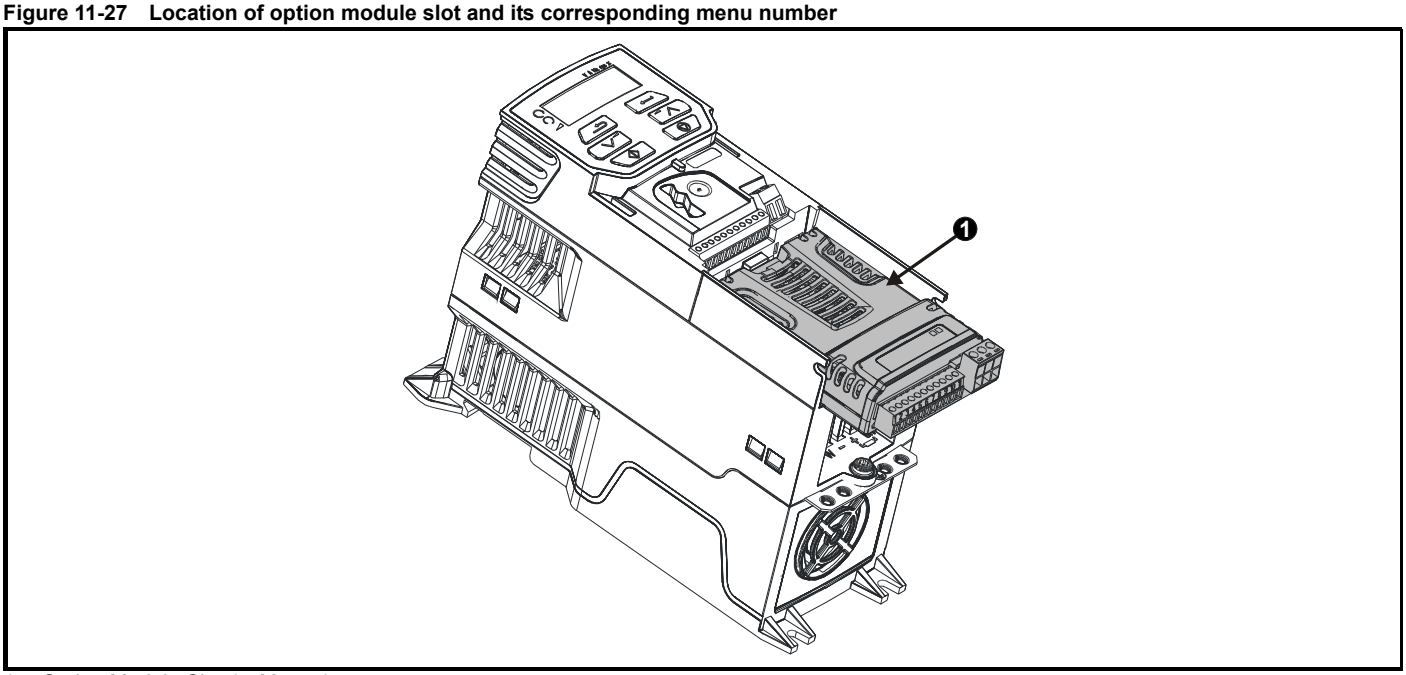

1. Option Module Slot 1 - Menu 15

11.15.1 Parameters common to all categories

Parameter		Range(⇳)	Default(⇨)	Type					
15.001	Module ID	0 to 65535		RO	Num	ND	NC	PT	
15.002	Software Version	00.00.00 to 99.99.99		RO	Ver	ND	NC	PT	
15.003	Hardware Version	0.00 to 99.99		RO	Num	ND	NC	PT	
15.004	Serial Number LS	0 to 999999		RO	Num	ND	NC	PT	
15.005	Serial Number MS			RO	Num	ND	NC	PT	
15.006	Module Status	-2 to 3		RO	Txt	ND	NC	PT	
15.007	Module Reset	Off (0) or On (1)	Off (0)	RW	Bit		NC		

The option module ID indicates the type of module that is installed in the corresponding slot. See the relevant option module user guide for more information regarding the module.

Option module ID	Module	Category
0	No module installed	
209	SI-I/O	Automation (I/O Expansion)
431	SI-EtherCAT	Fieldbus
433	SI-Ethernet	
434	SI-PROFINET V2	
443	SI-PROFIBUS	
447	SI-DeviceNet	
448	SI-CANopen	

11.16 Menu 18: Application menu 1

Parameter		Range (⇕)		Default(⇨)		Type					
		OL	RFC-A	OL	RFC-A						
18.001	Application Menu 1 Power-down Save Integer	-32768 to 32767		0		RW	Num				PS
18.002	Application Menu 1 Read-only Integer 2					RO	Num	ND	NC		
18.003	Application Menu 1 Read-only Integer 3					RO	Num	ND	NC		
18.004	Application Menu 1 Read-only Integer 4					RO	Num	ND	NC		
18.005	Application Menu 1 Read-only Integer 5					RO	Num	ND	NC		
18.006	Application Menu 1 Read-only Integer 6					RO	Num	ND	NC		
18.007	Application Menu 1 Read-only Integer 7					RO	Num	ND	NC		
18.008	Application Menu 1 Read-only Integer 8					RO	Num	ND	NC		
18.009	Application Menu 1 Read-only Integer 9					RO	Num	ND	NC		
18.010	Application Menu 1 Read-only Integer 10					RO	Num	ND	NC		
18.011	Application Menu 1 Read-write Integer 11			0		RW	Num				US
18.012	Application Menu 1 Read-write Integer 12					RW	Num				US
18.013	Application Menu 1 Read-write Integer 13					RW	Num				US
18.014	Application Menu 1 Read-write Integer 14					RW	Num				US
18.015	Application Menu 1 Read-write Integer 15					RW	Num				US
18.016	Application Menu 1 Read-write Integer 16					RW	Num				US
18.017	Application Menu 1 Read-write Integer 17					RW	Num				US
18.018	Application Menu 1 Read-write Integer 18					RW	Num				US
18.019	Application Menu 1 Read-write Integer 19					RW	Num				US
18.020	Application Menu 1 Read-write Integer 20					RW	Num				US
18.021	Application Menu 1 Read-write Integer 21					RW	Num				US
18.022	Application Menu 1 Read-write Integer 22					RW	Num				US
18.023	Application Menu 1 Read-write Integer 23					RW	Num				US
18.024	Application Menu 1 Read-write Integer 24					RW	Num				US
18.025	Application Menu 1 Read-write Integer 25					RW	Num				US
18.026	Application Menu 1 Read-write Integer 26					RW	Num				US
18.027	Application Menu 1 Read-write Integer 27					RW	Num				US
18.028	Application Menu 1 Read-write Integer 28					RW	Num				US
18.029	Application Menu 1 Read-write Integer 29					RW	Num				US
18.030	Application Menu 1 Read-write Integer 30					RW	Num				US
18.031	Application Menu 1 Read-write bit 31	Off (0) or On (1)		Off (0)		RW	Bit				US
18.032	Application Menu 1 Read-write bit 32					RW	Bit				US
18.033	Application Menu 1 Read-write bit 33					RW	Bit				US
18.034	Application Menu 1 Read-write bit 34					RW	Bit				US
18.035	Application Menu 1 Read-write bit 35					RW	Bit				US
18.036	Application Menu 1 Read-write bit 36					RW	Bit				US
18.037	Application Menu 1 Read-write bit 37					RW	Bit				US
18.038	Application Menu 1 Read-write bit 38					RW	Bit				US
18.039	Application Menu 1 Read-write bit 39					RW	Bit				US
18.040	Application Menu 1 Read-write bit 40					RW	Bit				US
18.041	Application Menu 1 Read-write bit 41					RW	Bit				US
18.042	Application Menu 1 Read-write bit 42					RW	Bit				US
18.043	Application Menu 1 Read-write bit 43					RW	Bit				US
18.044	Application Menu 1 Read-write bit 44					RW	Bit				US
18.045	Application Menu 1 Read-write bit 45					RW	Bit				US
18.046	Application Menu 1 Read-write bit 46					RW	Bit				US
18.047	Application Menu 1 Read-write bit 47					RW	Bit				US
18.048	Application Menu 1 Read-write bit 48					RW	Bit				US
18.049	Application Menu 1 Read-write bit 49					RW	Bit				US
18.050	Application Menu 1 Read-write bit 50					RW	Bit				US
18.051	Application Menu 1 Power-down Save long Integer	-2147483648 to 2147483647		0		RW	Num				PS
18.052	Application Menu 1 Power-down Save long Integer	-2147483648 to 2147483647		0		RW	Num				PS
18.053	Application Menu 1 Power-down Save long Integer	-2147483648 to 2147483647		0		RW	Num				PS
18.054	Application Menu 1 Power-down Save long Integer	-2147483648 to 2147483647		0		RW	Num				PS

RW	Read / Write	RO	Read only	Num	Number parameter	Bit	Bit parameter	Txt	Text string	Bin	Binary parameter	FI	Filtered
ND	No default value	NC	Not copied	PT	Protected parameter	RA	Rating dependent	US	User save	PS	Power-down save	DE	Destination

11.17 Menu 20: Application menu 2

Parameter		Range (⇕)		Default (⇨)		Type					
		OL	RFC-A	OL	RFC-A						
20.021	Application Menu 2 Read-write Long Integer 21	-2147483648 to 2147483647		0		RW	Num				
20.022	Application Menu 2 Read-write Long Integer 22					RW	Num				
20.023	Application Menu 2 Read-write Long Integer 23					RW	Num				
20.024	Application Menu 2 Read write Long Integer 24					RW	Num				
20.025	Application Menu 2 Read-write Long Integer 25					RW	Num				
20.026	Application Menu 2 Read-write Long Integer 26					RW	Num				
20.027	Application Menu 2 Read-write Long Integer 27					RW	Num				
20.028	Application Menu 2 Read-write Long Integer 28					RW	Num				
20.029	Application Menu 2 Read-write Long Integer 29					RW	Num				
20.030	Application Menu 2 Read-write Long Integer 30					RW	Num				

RW	Read / Write	RO	Read only	Num	Number parameter	Bit	Bit parameter	Txt	Text string	Bin	Binary parameter	FI	Filtered
ND	No default value	NC	Not copied	PT	Protected parameter	RA	Rating dependent	US	User save	PS	Power-down save	DE	Destination

11.18 Menu 21: Second motor parameters

Parameter		Range (⇕)		Default (⇨)		Type					
		OL	RFC-A	OL	RFC-A						
21.001	M2 Maximum Speed	0.00 to 550.00 Hz		50Hz: 50.00 Hz, 60Hz: 60.00 Hz		RW	Num				US
21.002	M2 Minimum Speed	0.00 to Pr **21.001** Hz		0.00 Hz		RW	Num				US
21.003	M2 Reference Selector	A1.A2 (0), A1.Pr (1), A2.Pr (2), PrESEt (3), PAd (4), rES (5), PAd.rEF (6)		A1.A2 (0)		RW	Txt				US
21.004	M2 Acceleration Rate 1	0.0 to 32000.0 s/Maximum Frequency		5.0 s/Maximum Frequency		RW	Num				US
21.005	M2 Deceleration Rate 1	0.0 to 32000.0 s/Maximum Frequency		10.0 s/Maximum Frequency		RW	Num				US
21.006	M2 Motor Rated Frequency	0.00 to 550.00 Hz		50Hz: 50.00 Hz 60Hz: 60.00 Hz		RW	Num		RA		US
21.007	M2 Motor Rated Current	0.00 to Drive Rating A		Maximum Heavy Duty Rating (11.032)		RW	Num		RA		US
21.008	M2 Motor Rated Speed	0.0 to 33000.0 rpm		50 Hz: 1500.0 rpm 60 Hz: 1800.0 rpm	50 Hz: 1450.0rpm 60 Hz 1750.0 rpm	RW	Num				US
21.009	M2 Motor Rated Voltage	0 to 765 V		110 V drive: 230 V 200 V drive: 230 V 400 V drive 50Hz: 400 V 400 V drive 60Hz: 460 V 575 V drive: 575 V		RW	Num		RA		US
21.010	M2 Motor Rated Power Factor	0.00 to 1.00		0.85		RW	Num		RA		US
21.011	M2 Number of Motor Poles*	Auto (0) to 32 (16)		Auto (0)		RW	Num				US
21.012	M2 Stator Resistance	0.0000 to 99.9999 Ω		0.0000 Ω		RW	Num		RA		US
21.014	M2 Transient Inductance	0.000 to 500.000 mH		0.000 mH		RW	Num		RA		US
21.015	Motor 2 Active	Off (0) or On (1)				RO	Bit	ND	NC	PT	
21.016	M2 Motor Thermal Time Constant 1	1 to 3000 s		179 s	179 s	RW	Num				US
21.017	M2 Frequency Controller Proportional Gain Kp1		0.000 to 200.000 s/rad		0.100 s/rad	RW	Num				US
21.018	M2 Frequency Controller Integral Gain Ki1		0.00 to 655.35 s²/rad		0.10 s²/rad	RW	Num				US
21.019	M2 Frequency Controller Differential Feedback Gain Kd1		0.00000 to 0.65535 1/rad		0.00000 1/rad	RW	Num				US
21.022	M2 Current Controller Kp Gain	0.00 to 4000.00		20.00		RW	Num				US
21.023	M2 Current Controller Ki Gain	0.000 to 600.000		40.000		RW	Num				US
21.024	M2 Stator Inductance	0.00 to 5000.00 mH		0.00 mH		RW	Num		RA		US
21.025	M2 Saturation Breakpoint 1		0.0 to 100.0 %		50.0 %	RW	Num				US
21.026	M2 Saturation Breakpoint 3		0.0 to 100.0 %		75.0 %	RW	Num				US
21.027	M2 Motoring Current Limit	0.0 to VM_MOTOR2_CURRENT_LIMIT %		165.0 %**	175.0 %***	RW	Num		RA		US
21.028	M2 Regenerating Current Limit	0.0 to VM_MOTOR2_CURRENT_LIMIT %		165.0 %**	175.0 %***	RW	Num		RA		US
21.029	M2 Symmetrical Current Limit	0.0 to VM_MOTOR2_CURRENT_LIMIT %		165.0 %**	175.0 %***	RW	Num		RA		US
21.033	M2 Low Frequency Thermal Protection Mode	0 to 1		0		RW	Num				US
21.041	M2 Saturation Breakpoint 2		0.0 to 100.0 %		0.0 %	RW	Num				US
21.042	M2 Saturation Breakpoint 4		0.0 to 100.0 %		0.0 %	RW	Num				US

* When read via serial communications, this parameter will show pole pairs.

** For size 9, the default is 141.9 %

*** For size 9, the default is 150.0 %

RW	Read / Write	RO	Read only	Num	Number parameter	Bit	Bit parameter	Txt	Text string	Bin	Binary parameter	FI	Filtered
ND	No default value	NC	Not copied	PT	Protected parameter	RA	Rating dependent	US	User save	PS	Power-down save	DE	Destination

11.19 Menu 22: Additional Menu 0 set-up

Parameter		Range(⇕)		Default(⇨)		Type					
		OL	RFC-A	OL	RFC-A						
22.011	Parameter 00.011 Set-up	0.000 to 30.999		6.004		RW	Num			PT	US
22.012	Parameter 00.012 Set-up	0.000 to 30.999		0.000		RW	Num			PT	US
22.013	Parameter 00.013 Set-up	0.000 to 30.999		0.000		RW	Num			PT	US
22.014	Parameter 00.014 Set-up	0.000 to 30.999		0.000		RW	Num			PT	US
22.015	Parameter 00.015 Set-up	0.000 to 30.999		1.005		RW	Num			PT	US
22.016	Parameter 00.016 Set-up	0.000 to 30.999		7.007		RW	Num			PT	US
22.017	Parameter 00.017 Set-up	0.000 to 30.999		1.010		RW	Num			PT	US
22.018	Parameter 00.018 Set-up	0.000 to 30.999		1.021		RW	Num			PT	US
22.019	Parameter 00.019 Set-up	0.000 to 30.999		1.022		RW	Num			PT	US
22.020	Parameter 00.020 Set-up	0.000 to 30.999		1.023		RW	Num			PT	US
22.021	Parameter 00.021 Set-up	0.000 to 30.999		1.024		RW	Num			PT	US
22.022	Parameter 00.022 Set-up	0.000 to 30.999		11.019		RW	Num			PT	US
22.023	Parameter 00.023 Set-up	0.000 to 30.999		11.018		RW	Num			PT	US
22.024	Parameter 00.024 Set-up	0.000 to 30.999		11.021		RW	Num			PT	US
22.025	Parameter 00.025 Set-up	0.000 to 30.999		11.030		RW	Num			PT	US
22.026	Parameter 00.026 Set-up	0.000 to 30.999		0.000		RW	Num			PT	US
22.027	Parameter 00.027 Set-up	0.000 to 30.999		1.051		RW	Num			PT	US
22.028	Parameter 00.028 Set-up	0.000 to 30.999		2.004		RW	Num			PT	US
22.029	Parameter 00.029 Set-up	0.000 to 30.999		0.000	2.002	RW	Num			PT	US
22.030	Parameter 00.030 Set-up	0.000 to 30.999		11.042		RW	Num			PT	US
22.031	Parameter 00.031 Set-up	0.000 to 30.999		6.001		RW	Num			PT	US
22.032	Parameter 00.032 Set-up	0.000 to 30.999		5.013		RW	Num			PT	US
22.033	Parameter 00.033 Set-up	0.000 to 30.999		6.009		RW	Num			PT	US
22.034	Parameter 00.034 Set-up	0.000 to 30.999		8.035		RW	Num			PT	US
22.035	Parameter 00.035 Set-up	0.000 to 30.999		8.091		RW	Num			PT	US
22.036	Parameter 00.036 Set-up	0.000 to 30.999		7.055		RW	Num			PT	US
22.037	Parameter 00.037 Set-up	0.000 to 30.999		5.018		RW	Num			PT	US
22.038	Parameter 00.038 Set-up	0.000 to 30.999		5.012		RW	Num			PT	US
22.039	Parameter 00.039 Set-up	0.000 to 30.999		5.006		RW	Num			PT	US
22.040	Parameter 00.040 Set-up	0.000 to 30.999		5.011		RW	Num			PT	US
22.041	Parameter 00.041 Set-up	0.000 to 30.999		5.014		RW	Num			PT	US
22.042	Parameter 00.042 Set-up	0.000 to 30.999		5.015		RW	Num			PT	US
22.043	Parameter 00.043 Set-up	0.000 to 30.999		11.025		RW	Num			PT	US
22.044	Parameter 00.044 Set-up	0.000 to 30.999		11.023		RW	Num			PT	US
22.045	Parameter 00.045 Set-up	0.000 to 30.999		11.020		RW	Num			PT	US
22.046	Parameter 00.046 Set-up	0.000 to 30.999		12.042		RW	Num			PT	US
22.047	Parameter 00.047 Set-up	0.000 to 30.999		12.043		RW	Num			PT	US
22.048	Parameter 00.048 Set-up	0.000 to 30.999		12.044		RW	Num			PT	US
22.049	Parameter 00.049 Set-up	0.000 to 30.999		12.045		RW	Num			PT	US
22.050	Parameter 00.050 Set-up	0.000 to 30.999		12.046		RW	Num			PT	US
22.051	Parameter 00.051 Set-up	0.000 to 30.999		12.047		RW	Num			PT	US
22.052	Parameter 00.052 Set-up	0.000 to 30.999		0.000		RW	Num			PT	US
22.053	Parameter 00.053 Set-up	0.000 to 30.999		0.000		RW	Num			PT	US
22.054	Parameter 00.054 Set-up	0.000 to 30.999		12.051		RW	Num			PT	US
22.055	Parameter 00.055 Set-up	0.000 to 30.999		12.041		RW	Num			PT	US
22.056	Parameter 00.056 Set-up	0.000 to 30.999		10.020		RW	Num			PT	US
22.057	Parameter 00.057 Set-up	0.000 to 30.999		10.021		RW	Num			PT	US
22.058	Parameter 00.058 Set-up	0.000 to 30.999		10.022		RW	Num			PT	US
22.059	Parameter 00.059 Set-up	0.000 to 30.999		11.047		RW	Num			PT	US
22.060	Parameter 00.060 Set-up	0.000 to 30.999		11.048		RW	Num			PT	US
22.061	Parameter 00.061 Set-up	0.000 to 30.999		0.000		RW	Num			PT	US
22.062	Parameter 00.062 Set-up	0.000 to 30.999		0.000		RW	Num			PT	US
22.063	Parameter 00.063 Set-up	0.000 to 30.999		0.000		RW	Num			PT	US
22.064	Parameter 00.064 Set-up	0.000 to 30.999		02.039		RW	Num			PT	US
22.065	Parameter 00.065 Set-up	0.000 to 30.999		0.000	3.010	RW	Num			PT	US
22.066	Parameter 00.066 Set-up	0.000 to 30.999		0.000	3.011	RW	Num			PT	US

Parameter		Range(⇕)		Default(⇨)		Type					
		OL	RFC-A	OL	RFC-A						
22.067	Parameter 00.067 Set-up	0.000 to 30.999		0.000	3.079	RW	Num			PT	US
22.068	Parameter 00.068 Set-up	0.000 to 30.999		0.000	0.000	RW	Num			PT	US
22.069	Parameter 00.069 Set-up	0.000 to 30.999		5.040		RW	Num			PT	US
22.070	Parameter 00.070 Set-up	0.000 to 30.999		14.001		RW	Num			PT	US
22.071	Parameter 00.071 Set-up	0.000 to 30.999		14.010		RW	Num			PT	US
22.072	Parameter 00.072 Set-up	0.000 to 30.999		14.011		RW	Num			PT	US
22.073	Parameter 00.073 Set-up	0.000 to 30.999		14.006		RW	Num			PT	US
22.074	Parameter 00.074 Set-up	0.000 to 30.999		14.013		RW	Num			PT	US
22.075	Parameter 00.075 Set-up	0.000 to 30.999		14.014		RW	Num			PT	US
22.076	Parameter 00.076 Set-up	0.000 to 30.999		10.037		RW	Num			PT	US
22.077	Parameter 00.077 Set-up	0.000 to 30.999		11.032		RW	Num			PT	US
22.078	Parameter 00.078 Set-up	0.000 to 30.999		11.029		RW	Num			PT	US
22.079	Parameter 00.079 Set-up	0.000 to 30.999		11.031		RW	Num			PT	US
22.080	Parameter 00.080 Set-up	0.000 to 30.999		0.000		RW	Num			PT	US

RW	Read / Write	RO	Read only	Num	Number parameter	Bit	Bit parameter	Txt	Text string	Bin	Binary parameter	FI	Filtered
ND	No default value	NC	Not copied	PT	Protected parameter	RA	Rating dependent	US	User save	PS	Power-down save	DE	Destination

11.20 Menu 24: Option Module Application

12 Diagnostics

The keypad display on the drive gives various information about the status of the drive. The keypad display provides information on the following categories:

- Trip indications
- Alarm indications
- Status indications

WARNING Users must not attempt to repair a drive if it is faulty, nor carry out fault diagnosis other than through the use of the diagnostic features described in this chapter.
If a drive is faulty, it must be returned to an authorized Control Techniques distributor for repair.

12.1 Status modes (Keypad and LED status)

Figure 12-1 Keypad status modes

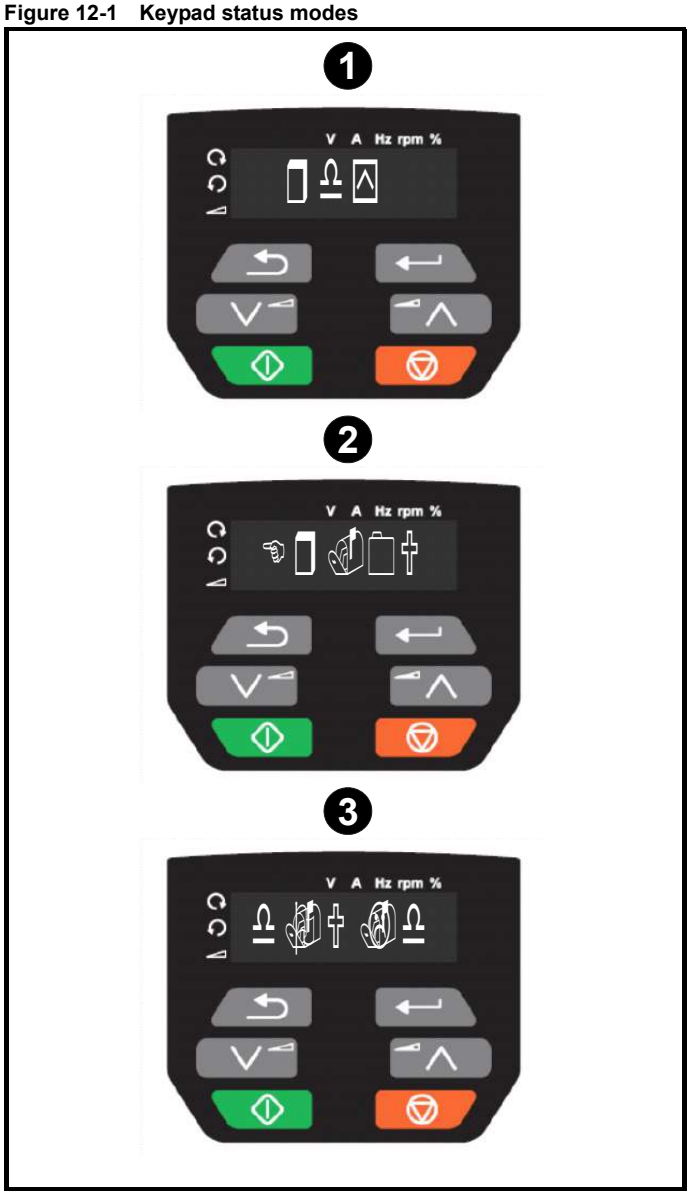

1 Drive OK status

2 Trip status

3 Alarm status

12.2 Trip indications

The output of the drive is disabled under any trip condition so that the drive stops controlling the motor. If the motor is running when the trip occurs it will coast to a stop.

During a trip condition, the display indicates that a trip has occurred and the keypad will display the trip string. Some trips have a sub-trip number to provide additional information about the trip. If a trip has a sub-trip number, the sub-trip number is flashed alternately with the trip string.

Trips are listed alphabetically in Table 12-2 based on the trip indication shown on the drive display. Alternatively, the drive status can be read in Pr **10.001** 'Drive OK' using communication protocols. The most recent trip can be read in Pr **10.020** providing a trip number. It must be noted that the hardware trips (HF01 to HF23) do not have trip numbers (except HF08, HF11, HF12 & HF18 which have sub-trip number/s). The trip number must be checked in Table 12-2 to identify the specific trip.

Example

1. Trip code 2 is read from Pr **10.020** via serial communications.
2. Checking Table 12-3 shows Trip 2 is an OV trip.

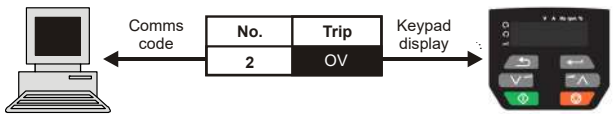

3. Look up OV in Table 12-2.
4. Perform checks detailed under *Diagnosis*.

12.3 Identifying a trip / trip source

Some trips only contain a trip string whereas some other trips have a trip string along with a sub-trip number which provides the user with additional information about the trip.

A trip can be generated from a control system or from a power system. The sub-trip number associated with the trips listed in Table 12-1 is in the form xxyzz and used to identify the source of the trip.

Table 12-1 Trips associated with xxyzz sub-trip number

OV	PH.Lo
PSU	OI.Sn
Oht.I	tH.Fb
Oht.P	P.dAt
Oh.dc	

The digits xx are 00 for a trip generated by the control system. For a drive, if the trip is related to the power system then xx will have a value of 01, when displayed the leading zeros are suppressed.

For a control system trip (xx is zero), the y digit where relevant is defined for each trip. If not relevant, the y digit will have a value of zero.

The zz digits give the reason for the trip and are defined in each trip description.

Figure 12-2 Key to sub-trip number

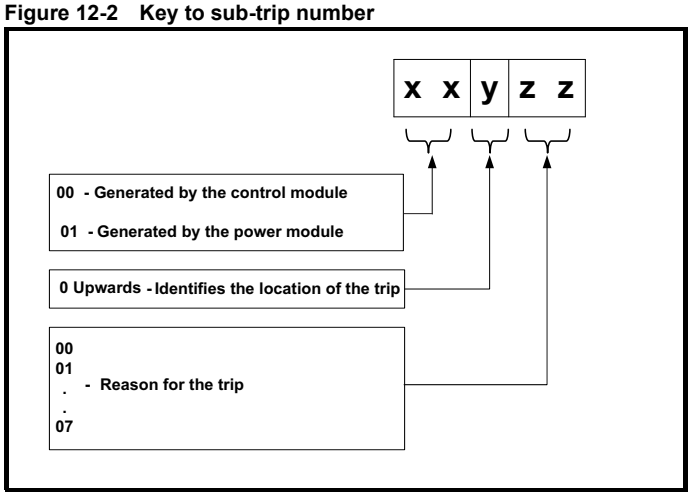

12.4 Trips, Sub-trip numbers

Table 12-2 Trip indications

Trip	Diagnosis
C.Acc	**NV Media Card Write fail**
185	The *C.Acc* trip indicates that the drive was unable to access the NV Media Card. If the trip occurs during the data transfer to the card then the file being written may be corrupted. If the trip occurs when the data being transferred to the drive then the data transfer may be incomplete. If a parameter file is transferred to the drive and this trip occurs during the transfer, the parameters are not saved to non-volatile memory, and so the original parameters can be restored by powering the drive down and up again. **Recommended actions:** • Check NV Media Card is installed / located correctly • Replace the NV Media Card
C.by	**NV Media Card cannot be accessed as it is being accessed by an option module**
178	The *C.by* trip indicates that an attempt has been made to access a file on NV Media Card, but the NV Media Card is already being accessed by an Option Module. No data is transferred. **Recommended actions:** • Wait for the option module to finish accessing the NV Media Card and re-attempt the required function
C.cPr	**NV Media Card file/data is different to the one in the drive**
188	A compare has been carried out between a file on the NV Media Card and the drive, a *C.cPr* trip is initiated if the parameters on the NV Media Card are different to the drive. **Recommended actions:** • Set Pr **00** to 0 and reset the trip • Check to ensure the correct data block on the NV Media Card has been used for the compare
C.d.E	**NV Media Card data location already contains data**
179	The *C.d.E* trip indicates that an attempt has been made to store data on a NV Media Card in a data block which already contains data. **Recommended actions:** • Erase the data in data location • Write data to an alternative data location
C.dAt	**NV Media Card data not found**
183	The *C.dAt* trip indicates that an attempt has been made to access a non-existent file on the NV Media Card. No data is transferred. **Recommended actions:** • Ensure data file number is correct
C.Err	**NV Media Card data structure error**
182	The *C.Err* trip indicates that an attempt has been made to access the NV Media Card but an error has been detected in the data structure on the card. Resetting the trip will cause the drive to erase and create the correct folder structure. On an SD card, whilst this trip is present, missing directories will be created and if the header file is missing it will be created. The cause of the trip can be identified by the sub-trip. **Sub-trip** / **Reason** 1 — The required folder and file structure is not present 2 — The 000.DAT file is corrupted 3 — Two or more files in the <MCDF\> folder have the same file identification number **Recommended actions:** • Erase all the data block and re-attempt the process • Ensure the card is located correctly • Replace the NV Media Card
C.Ful	**NV Media Card full**
184	The *C.Ful* trip indicates that an attempt has been made to create a data block on a NV Media Card, but there is not enough space left on the card. No data is transferred. **Recommended actions:** • Delete a data block or the entire NV Media Card to create space • Use a different NV Media Card

Trip	Diagnosis
C.OPt	**NV Media Card trip; option module installed is different between source drive and destination drive**
180	The *C.OPt* trip indicates that parameter data is being transferred from the NV Media Card to the drive, but the option module category is different between the source and destination drives. This trip does not stop the data transfer, but is a warning that the data for the option module that is different will be set to the default values and not the values from the card. This trip also applies if a compare is performed between the data block on the card and the drive, and the option module fitted is different between the source and target. **Recommended actions:** • Ensure the correct option module is installed. • Press the red reset button to acknowledge that the parameters for the option module installed will be at their default values • This trip can be suppressed by setting Pr **00** to 9666 and resetting the drive.
C.Pr	**NV Media Card data blocks are not compatible with the drive derivative**
175	The *C.Pr* trip is initiated either at power-up or when the card is accessed, If *Drive Derivative* (11.028) or *Product Type* (11.063) are different between the source and target drives. This trip can be reset and data can be transferred in either direction between the drive and the card. **Sub-trip** / **Reason** 1 — If *Drive Derivative* (11.028) is different between the source and target drives. This trip is initiated either at power-up or when the SD card is accessed. This trip can be reset and data can be transferred in either direction between the drive and the card. 2 — If *Product Type* (11.063) is different between the source and target drives or the file is corrupted or incompatible. This trip is initiated either at power-up or when the SD card is accessed. This trip can be reset but no data are transferred in either direction between the drive and the card. **Recommended actions:** • Use a different NV Media Card • This trip can be suppressed by setting Pr **00** to 9666 and resetting the drive • Choose a file compatible between the source and target drives, if sub-trip 2.
C.rdo	**NV Media Card has the Read Only bit set**
181	The *C.rdo* trip indicates that an attempt has been made to modify data on a read-only NV Media Card or to modify a read-only data block. A NV Media Card is read-only if the read-only flag has been set. **Recommended actions:** • Clear the read only flag by setting Pr **00** to 9777 and reset the drive. This will clear the read-only flag for all data blocks in the NV Media Card
C.rtg	**NV Media Card Trip; The voltage and / or current rating of the source and destination drives are different**
186	The *C.rtg* trip indicates that parameter data is being transferred from the NV Media Card to the drive, but the current and / or voltage ratings are different between source and destination drives. This trip also applies if a compare (using Pr **mm.000** set to 8yyy) is performed between the data block on a NV Media Card and the drive. The *C.rtg* trip does not stop the data transfer but is a warning that rating specific parameters with the RA attribute may not be transferred to the destination drive. **Recommended actions:** • Reset the drive to clear the trip • Ensure that the drive rating dependent parameters have transferred correctly • This trip can be suppressed by setting Pr **00** to 9666 and resetting the drive.
C.SL	**NV Media Card trip; Option module file transfer has failed**
174	The *C.SL* trip is initiated, if the transfer of an option module file to or from a module failed because the option module does not respond correctly. If this happens this trip is produced with the sub-trip number indicating the option module slot number.
C.tyP	**NV Media Card parameter set not compatible with current drive mode**
187	The *C.tyP* trip is produced during a compare if the drive mode in the data block on the NV Media Card is different from the current drive mode. This trip is also produced if an attempt is made to transfer parameters from a NV Media Card to the drive if the operating mode in the data block is outside the allowed range of operating modes, for the target drive. **Recommended actions:** • Ensure the destination drive supports the drive operating mode in the parameter file. • Clear the value in Pr **00** and reset the drive • Ensure destination drive operating mode is the same as the source parameter file

Trip	Diagnosis
cL.A1	**Analog input 1 current loss**
28	The *cL.A1* trip indicates that a current loss was detected in current mode on Analog input 1 (Terminal 2). In 4-20 mA and 20-4 mA modes loss of input is detected if the current falls below 3 mA. **Recommended actions:** • Check control wiring is correct • Check control wiring is undamaged • Check the *Analog Input 1 Mode* (07.007) • Current signal is present and greater than 3 mA
CL.bt	**Trip initiated from the *Control Word* (06.042)**
35	The *CL.bt* trip is initiated by setting bit 12 on the control word in Pr **06.042** when the control word is enabled (Pr **06.043** = On). **Recommended actions:** • Check the value of Pr **06.042.** • Disable the control word in *Control Word Enable* (Pr **06.043**) Bit 12 of the control word set to a one causes the drive to trip on Control Word When the control word is enabled, the trip can only be cleared by setting bit 12 to zero
Cur.c	**Current calibration range**
231	Current calibration range error. **Recommended actions:** • Hardware fault - Contact the supplier of the drive.
Cur.O	**Current feedback offset error**
225	The *Cur.O* trip indicates that the current offset is too large to be trimmed. **Recommended actions:** • Ensure that there is no possibility of current flowing in the output phases of the drive when the drive is not enabled • Hardware fault – Contact the supplier of the drive
d.Ch	**Drive parameters are being changed**
97	A user action or a file system write is active that is changing the drive parameters and the drive has been commanded to enable, i.e. *Drive Active* (10.002) = 1. The user actions that change drive parameters are loading defaults, changing drive mode, or transferring data from an NV memory card to the drive. The file system actions that will cause this trip to be initiated if the drive is enabled during the transfer is writing a parameter or macro file to the drive. It should be noted that none of these actions can be started if the drive is active, and so the trip only occurs if the action is started and then the drive is enabled. **Recommended actions:** • Ensure the drive is not enabled when one of the following is being carried out: Loading defaults Changing drive mode Transferring data from NV media card
dcct	**dcct reference out of range for size 5 upwards only**
110	The sub-trip number indicates the DCCT that has caused the trip. **Recommended actions:** • Hardware fault - Contact the supplier of the drive
dEr.E	**Derivative file error**
246	Derivative file error with sub-trips:

Sub-trip	Reason	Comments
1	The derivative file is missing or is invalid	Occurs when the drive powers-up. Load valid derivative file matching the control board hardware.
2	The derivative file does not match the control board hardware	Occurs when the drive powers-up. Load valid derivative file matching the control board hardware.
3	The derivative file has been changed for a file with a different derivative number.	Occurs when the drive powers-up or the file is programmed. The file tasks will not run.

Recommended actions:

• Contact the supplier of the drive

Trip	Diagnosis
dEr.I	**Derivative product image error**
248	The *dEr.I* trip indicates that an error has been detected in the derivative product image. The reason for the trip can be identified by the sub-trip number.

Sub-trip	Reason	Comments
1	Divide by zero	
2	Undefined trip	
3	Attempted fast parameter access set-up with non-existent parameter	
4	Attempted access to non-existent parameter	
5	Attempted write to read-only parameter	
6	Attempted an over-range write	
7	Attempted read from write-only parameter	
30	The image has failed because either its CRC is incorrect, or there are less than 6 bytes in the image or the image header version is less than 5	Occurs when the drive powers-up or the image is programmed. The image tasks will not run
31	The image requires more RAM for heap and stack than can be provided by the drive.	As 30
32	The image requires an OS function call that is higher than the maximum allowed.	As 30
33	The ID code within the image is not valid	As 30
34	The derivative image has been changed for an image with a different derivative number	As 30
40	The timed task has not completed in time and has been suspended	Reduce code in timed task or power down repeat rate.
41	Undefined function called, i.e. a function in the host system vector table that has not been assigned	As 40
51	Core menu customization table CRC check failed	As 30
52	Customizable menu table CRC check failed	As 30
53	Customizable menu table changed	Occurs when the drive powers-up or the image is programmed and the table has changed. Defaults are loaded for the derivative menu and the trip will keep occurring until drive parameters are saved.
61	The option module installed in slot 1 is not allowed with the derivative image	As 30
80	Image is not compatible with the control board	Initiated from within the image code
81	Image is not compatible with the control board serial number	As 80

Recommended actions:

- Contact the supplier of the drive

dESt	**Two or more parameters are writing to the same destination parameter**
199	The *dESt* trip indicates that destination parameters of two or more functions (Menus 7, 8, 9, 12 or 14) within the drive are writing to the same parameter. **Recommended actions:** • Set Pr **00** to ‘dest’ or 12001 and check all visible parameters in all menus for parameter write conflicts.

Trip	Diagnosis
dr.CF	**Drive configuration**
232	The hardware ID does not match the user software ID. **Sub-trip** / **Reason** 1 – The hardware ID does not match the user software ID (size 5 upwards only). 2 – Invalid hardware ID. 3 – The hardware ID does not match the user software ID (Size 1-4) **Recommended actions:** • Hardware fault - Contact the supplier of the drive
EEF	**Default parameters have been loaded**
31	The *EEF* trip indicates that default parameters have been loaded. The exact cause/reason of the trip can be identified from the sub-trip number. **Sub-trip** / **Reason** 1 – The most significant digit of the internal parameter database version number has changed 2 – The CRC's applied to the parameter data stored in internal non-volatile memory indicate that a valid set of parameters cannot be loaded 3 – The drive mode restored from internal non-volatile memory is outside the allowed range for the product or the derivative image does not allow the previous drive mode 4 – The drive derivative image has changed 5 – The power stage hardware has changed 6 – Reserved 7 – Reserved 8 – The control board hardware has changed 9 – The checksum on the non-parameter area of the EEPROM has failed The drive holds two banks of user save parameters and two banks of power down save parameters in non-volatile memory. If the last bank of either set of parameters that was saved is corrupted a U.S or Pd.S trip is produced. If one of these trips occurs the parameters values that were last saved successfully are used. It can take some time to save parameters when requested by the user and if the power is removed from the drive during this process it is possible to corrupt the data in the non-volatile memory. If both banks of user save parameters or both banks of power down save parameters are corrupted or one of the other conditions given in the table above occurs EEF.xxx trip is produced. If this trip occurs it is not possible to use the data that has been saved previously, and so the drive will be loaded with default parameters. The trip can only be reset if Parameter 00 (mm.000) is set to 10, 11, 1233 or 1244 or if Load Defaults (11.043) is set to a non-zero value. **Recommended actions:** • Default the drive and perform a reset • Allow sufficient time to perform a save before the supply to the drive is removed • If the trip persists - return drive to supplier
Et	**An External trip is initiated**
6	An *Et* trip has occurred. The cause of the trip can be identified from the sub trip number displayed after the trip string. See table below. An external trip can also be initiated by writing a value of 6 in Pr **10.038**. **Sub-trip** / **Reason** 3 – *External Trip* (10.032) = 1 **Recommended actions:** • Check the value of Pr **10.032**. • Select ‘dest’ (or enter 12001) in Pr **00** and check for a parameter controlling Pr **10.032**. • Ensure Pr **10.032** or Pr **10.038** (= 6) is not being controlled by serial comms
FAn.F	**Fan fail**
173	This trip cannot be reset until 10 s after the trip was initiated. **Recommended actions:** • Check that the fan is installed and connected correctly. • Check that the fan is not obstructed. • Contact the supplier of the drive to replace the fan.
Fi.Ch	**File changed**
247	**Recommended actions:** • Power cycle the drive.

Trip	Diagnosis
FI.In	**Firmware incompatibility**
237	The FI.In trip indicates that the user firmware is incompatible with the power firmware. **Recommended actions:** Re-program the drive with the latest version of the drive firmware for the Commander C200/C300, using Connect.
HF01	**Data processing error: CPU hardware fault**
	The *HF01* trip indicates that a CPU address error has occurred. This trip indicates that the control PCB on the drive has failed. **Recommended actions:** • Hardware fault – Contact the supplier of the drive
HF02	**Data processing error: CPU memory management fault**
	The *HF02* trip indicates that a DMAC address error has occurred. This trip indicates that the control PCB on the drive has failed. **Recommended actions:** • Hardware fault – Contact the supplier of the drive
HF03	**Data processing error: CPU has detected a bus fault**
	The *HF03* trip indicates that a bus fault has occurred. This trip indicates that the control PCB on the drive has failed. **Recommended actions:** • Hardware fault – Contact the supplier of the drive
HF04	**Data processing error: CPU has detected a usage fault**
	The *HF04* trip indicates that a usage fault has occurred.This trip indicates that the control PCB on the drive has failed. **Recommended actions:** • Hardware fault – Contact the supplier of the drive
HF05	**Reserved**
HF06	**Reserved**
HF07	**Data processing error: Watchdog failure**
	The *HF07* trip indicates that a watchdog failure has occurred. This trip indicates that the control PCB on the drive has failed. **Recommended actions:** • Hardware fault – Contact the supplier of the drive
HF08	**Data processing error: CPU Interrupt crash**
	The *HF08* trip indicates that a CPU interrupt crash has occurred. This trip indicates that the control PCB on the drive has failed. The crash level is indicated by the sub-trip number. **Recommended actions:** • Hardware fault – Contact the supplier of the drive
HF09	**Data processing error: Free store overflow**
	The *HF09* trip indicates that a free store overflow has occurred. This trip indicates that the control PCB on the drive has failed. **Recommended actions:** • Hardware fault – Contact the supplier of the drive
HF10	**Reserved**
HF11	**Data processing error: Non-volatile memory comms error**
	The *HF11* trip indicates that a non-volatile memory comms error has occurred. This trip indicates that the control PCB on the drive has failed. The crash level is indicated by the sub-trip number.

Sub-trip	Reason	Recommended action
1	Non-volatile memory comms error.	Hardware fault – contact the supplier of the drive.
2	EEPROM size is incompatible with the user firmware.	Re-program drive with compatible user firmware.

Trip	Diagnosis
HF12	**Data processing error: Main program stack overflow**
	The *HF12* trip indicates that the main program stack over flow has occurred. The stack can be identified by the sub-trip number. This trip indicates that the control PCB on the drive has failed. **Sub-trip** / **Reason** **1** Derivative background stack overflow **2** Derivative timed stack overflow **3** Main system interrupt stack overflow **4** Main system background stack overflow **Recommended actions:** • Hardware fault – Contact the supplier of the drive
HF13	**Reserved**
HF14	**Reserved**
HF15	**Reserved**
HF16	**Data processing error: RTOS error**
	The *HF16* trip indicates that a RTOS error has occurred. This trip indicates that the control PCB on the drive has failed. **Recommended actions:** • Hardware fault – Contact the supplier of the drive
HF17	**Reserved**
HF18	**Data processing error: Internal flash memory has failed**
	The *HF18* trip indicates that the internal flash memory has failed when writing option module parameter data. The reason for the trip can be identified by the sub-trip number. **Sub-trip** / **Reason** 1 Programming error while writing menu in flash 2 Erase flash block containing setup menus failed 3 Erase flash block containing application menus failed **Recommended actions:** Hardware fault - contact the supplier of the drive.
HF19	**Data processing error: CRC check on the firmware has failed**
	The *HF19* trip indicates that the CRC check on the drive firmware has failed. The drive is now in its bootloader mode and is waiting for a new image to be downloaded using Connect. Once a new image is downloaded, the drive can run normally. **Recommended actions:** • Re-program the drive with latest control and power firmware using Connect. • Hardware fault - Contact the supplier of the drive
HF23	**Hardware fault**
	Recommended actions: • If this trip occurs, contact the supplier of the drive.
It.Ac	**Output current overload timed out (I^2t)**
20	The *It.Ac* trip indicates a motor thermal overload based on the *Motor Rated Current* (Pr **05.007**) and *Motor Thermal Time Constant* (Pr **04.015**). Pr **04.019** displays the motor temperature as a percentage of the maximum value. The drive will trip on *It.AC* when Pr **04.019** gets to 100 %. **Recommended actions:** • Ensure the load is not jammed / sticking • Check the load on the motor has not changed • Tune the motor rated speed parameter (Pr **05.008**) (RFC-A mode only) • Ensure the motor rated current is not zero

Trip	Diagnosis
It.br	**Braking resistor overload timed out (I^2t)**
19	The *It.br* trip indicates that braking resistor overload has timed out. The value in *Braking Resistor Thermal Accumulator* (10.039) is calculated using *Braking Resistor Rated Power* (10.030), *Braking Resistor Thermal Time Constant* (10.031) and *Braking Resistor Resistance* (10.061). The *It.br* trip is initiated when the *Braking Resistor Thermal Accumulator* (10.039) reaches 100 %. **Recommended actions:** • Ensure the values entered in Pr **10.030**, Pr **10.031** and Pr **10.061** are correct. • Check resistor value and power rating. • If an external thermal protection device is being used and the braking resistor software overload protection is not required, set Pr **10.030**, Pr **10.031** or Pr **10.061** to 0 to disable the trip.
LF.Er	**Communication has been lost / errors detected between power, control and rectifier modules**
90	This trip is initiated if there is no communications between power, control or the rectifier module or if excessive communication errors have been detected. The reason for the trip can be identified by the sub-trip number. **Source** / **xx** / **y** / **zz** Control system / 00 / 0 / 01: No communications between the control system and the power system. Control system / 00 / 0 / 02: Excessive communication errors between the control system and power system. Power system / 01 / 1 / 00: Excessive communications errors detected by the rectifier module. **Recommended actions:** • Hardware fault - contact the supplier of the drive.
no.PS	**No power board**
236	No communication between the power and control boards. **Recommended actions**: • Hardware fault - contact the supplier of the drive.
O.Ld1	**Digital output overload**
26	This trip indicates that the total current drawn from the AI Adaptor 24 V or from the digital output has exceeded the limit. **Sub-trip** / **Reason** 1 / Digital output or 24 V supply load on control terminal is too high. 2 / AI Adaptor 24 V load is too high **Recommended actions:** • Check total loads on digital outputs and 24 V • Check control wiring is correct • Check output wiring is undamaged
O.SPd	**Motor frequency has exceeded the over frequency threshold**
7	In open-loop mode, if the *Post-ramp Reference* (02.001) exceeds the threshold set in the *Over Frequency Threshold* (03.008) in either direction, an O.SPd trip is produced. In RFC-A mode, if the *Estimated Frequency* (03.002) exceeds the Over Frequency Threshold in Pr **03.008** in either direction an O.SPd trip is produced. If Pr **03.008** is set to 0.00 the threshold is then equal to 1.2 x the value set in Pr **01.006**. **Recommended actions:** • Reduce the *Frequency Controller Proportional Gain* (03.010) to reduce the frequency overshoot (RFC-A mode only) • Check that a mechanical load is not driving motor • Reduce *Current Controller Ki Gain* (04.014).
Oht.C	**Control stage over temperature**
219	This trip indicates that a control stage over-temperature has been detected if Cooling Fan control (06.045) = 0. This trip causes the option module to go to standby and *Potential Drive Damage Conditions* (10.106) bit 1 to be set. **Recommended actions:** • Increase ventilation by setting Cooling Fan control (06.045) > 0.

Trip	Diagnosis
Oh.dc	**DC bus over temperature**
27	The *Oh.dc* trip indicates a DC bus component over temperature based on a software thermal model. The drive includes a thermal protection system to protect the DC bus components within the drive. This includes the effects of the output current and DC bus ripple. The estimated temperature is displayed as a percentage of the trip level in Pr **07.035**. If this parameter reaches 100 % then an *Oh.dc* trip is initiated. The drive will attempt to stop the motor before tripping. If the motor does not stop in 10 seconds the drive trips immediately.

Source	xx	y	zz	Description
Control system	00	2	00	DC bus thermal model gives trip with sub-trip 0

Recommended actions:

- Check the AC supply voltage balance and levels
- Check DC bus ripple level
- Reduce duty cycle
- Reduce motor load
- Check the output current stability. If unstable;
  - Check the motor map settings with motor nameplate (Pr **05.006**, Pr **05.007**, Pr **05.008**, Pr **05.009**, Pr **05.010**, Pr **05.011**) – (All Modes)
  - Disable slip compensation (Pr **05.027** = 0) – (Open loop)
  - Disable dynamic V to F operation (Pr **05.013** = 0) - (Open loop)
  - Select fixed boost (Pr **05.014** = Fixed) – (Open loop)
  - Select high stability space vector modulation (Pr **05.019** = 1) – (Open loop)
  - Disconnect the load and complete a rotating auto-tune (Pr **05.012**)
  - Reduce frequency loop gains (Pr **03.010**, Pr **03.011**, Pr **03.012**) – (RFC-A)

Oht.I	**Inverter over temperature based on thermal model**
21	This trip indicates that an IGBT junction over-temperature has been detected based on a software thermal model.The *Oht.I* trip is initiated when the temperature based on the thermal model reaches 145 °C. The trip reset temperature is 139 °C.

Source	xx	y	zz	Description
Control system	00	1	00	Inverter thermal model gives {Oht.I} trip with sub-trip 100

Recommended actions:

- Reduce the selected drive switching frequency
- Ensure *Auto-switching Frequency Change Disable* (05.035) is set to Off
- Reduce duty cycle
- Increase acceleration / deceleration rates
- Reduce motor load
- Check DC bus ripple
- Ensure all three input phases are present and balanced

Trip	Diagnosis
Oht.P	**Power stage over temperature**
22	This trip indicates that a power stage over-temperature has been detected. From the sub-trip 'xxyzz', the Thermistor location is identified by 'zz'.

Source	xx	y	zz	Description
Power system	01	0	zz	Thermistor location in the drive defined by zz

Drive size	Trip temperature (°C)	Trip reset temperature (°C)
1 to 4	95	90
5	115	110
06200XXX	115	110
06400XXX	125	120
06500XXX	120	115

Recommended actions:

- Check enclosure / drive fans are still functioning correctly
- Force the heatsink fans to run at maximum speed
- Check enclosure ventilation paths
- Check enclosure door filters
- Increase ventilation
- Reduce the drive switching frequency
- Reduce duty cycle
- Increase acceleration / deceleration rates
- Use S-ramp (Pr **02.006**)
- Reduce motor load
- Check the derating tables and confirm the drive is correctly sized for the application.
- Use a drive with larger current / power rating

OI.A1	**Analog input 1 over-current**
189	Current input on analog input 1 exceeds 24 mA.
OI.AC	**Instantaneous output over current detected**
3	The instantaneous drive output current has exceeded VM_DRIVE_CURRENT_MAX. This trip cannot be reset until 10 s after the trip was initiated. **Recommended actions/checks:** • Increase acceleration/deceleration rate • If seen during auto-tune reduce the voltage boost • Check for short circuit on the output cabling • Check integrity of the motor insulation using an insulation tester • Is the motor cable length within limits for the frame size? • Reduce the values in the frequency loop gain parameters - (Pr **03.010**, **03.011**, **03.012**) or (Pr **03.013**, **03.014**, **03.015**) • Reduce the values in the current loop gain parameters
OI.br	**Braking IGBT over current detected: short circuit protection for the braking IGBT activated**
4	The *OI.br* trip indicates that over current has been detected in braking IGBT or braking IGBT protection has been activated. This trip cannot be reset until 10 s after the trip was initiated. **Recommended actions:** • Check brake resistor wiring • Check braking resistor value is greater than or equal to the minimum resistance value • Check braking resistor insulation
OI.SC	**Output phase short-circuit**
228	Over-current detected on drive output when enabled. Possible motor earth fault. **Recommended actions:** • Check for short circuit on the output cabling • Check integrity of the motor insulation using an insulation tester • Is the motor cable length within limits for the frame size?

Trip	Diagnosis
Ol.Sn	**Snubber over-current detected**
92	This trip indicates that an over-current condition has been detected in the rectifier snubbing circuit, The exact cause of the trip can be identified by the sub-trip number.

Source	xx	y	zz
Power system	01	1	00: Rectifier snubber over-current trip detected

Recommended actions:

- Ensure the internal EMC filter is installed.
- Ensure the motor cable length does not exceed the maximum for selected switching frequency.
- Check for supply voltage imbalance.
- Check for supply disturbance such as notching from a DC drive.
- Check the motor and motor cable insulation with an insulation tester.
- Fit an output line reactor or sinusoidal filter.

Out.P — **Output phase loss detected**

98

The *Out.P* trip indicates that phase loss has been detected at the drive output. A test can be made for output phase loss when the drive is enabled or the output phase loss condition can be detected while the drive is running as defined by *Output Phase Loss Detection Enable* (06.059).

Sub-trip	Reason
1	U phase detected as disconnected when drive enabled to run.
2	V phase detected as disconnected when drive enabled to run.
3	W phase detected as disconnected when drive enabled to run.
4	The drive output frequency is above 4 Hz and a phase is disconnected for the time specified by *Output Phase Loss Detection Time* (06.058).

NOTE

If Pr **05.042** = 1, the physical output phases are reversed, and so sub-trip 3 refers to physical output phase V and sub-trip 2 refers to physical output phase W.

Recommended actions:

- Check motor and drive connections
- To disable the trip set *Output Phase Loss Detection Enable* (06.059) = 0

OV — **DC bus voltage has exceeded the peak level or maximum continuous level for 15 seconds**

2

The *OV* trip indicates that the DC bus voltage has exceeded the VM_DC_VOLTAGE[MAX] or VM_DC_VOLTAGE_SET[MAX] for 15 s. The trip threshold varies depending on voltage rating of the drive as shown below.

Voltage rating	VM_DC_VOLTAGE[MAX] Frame 1 to 4	VM_DC_VOLTAGE[MAX] Frame 5 to 9	VM_DC_VOLTAGE_SET[MAX]
100	510	415	400
200	510	415	400
400	870	830	800
575	N/A	990	955

Sub-trip Identification

Source	xx	y	zz
Control system	00	0	01: Instantaneous trip when the DC bus voltage exceeds VM_DC_VOLTAGE[MAX].
Control system	00	0	02: Time delayed trip indicating that the DC bus voltage is above VM_DC_VOLTAGE_SET[MAX].
Power system	01	0	00: Instantaneous trip when the DC bus voltage exceeds VM_DC_VOLTAGE[MAX].

Recommended actions:

- Increase deceleration ramp (Pr **04**)
- Decrease the braking resistor value (staying above the minimum value)
- Check nominal AC supply level
- Check for supply disturbances which could cause the DC bus to rise
- Check motor insulation using an insulation tester

Trip	Diagnosis
P.dAt	**Power system configuration data error**
220	The *P.dAt* trip indicates that there is an error in the configuration data stored in the power system. This trip can be generated from either the drive control system or from the power system. The trip is related to the table uploaded from the power system at power-up.

Source	xx	y	zz	Description
Control system	00	0	01	No data was obtained from the power board.
Control system	00	0	02	There is no data table.
Control system	00	0	03	The power system data table is bigger than the space available in the control pod to store it.
Control system	00	0	04	The size of the table given in the table is incorrect.
Control system	00	0	05	Table CRC error.
Control system	00	0	06	The version number of the generator software that produced the table is too low.
Control system	0	0	07	The power data table failed to be stored in the power board.
Power system	01	0	00	The power data table used internally by the power module has an error.
Power system	01	0	01	The power data table that is uploaded to the control system on power up has an error.
Power system	01	0	02	The power data table used internally by the power module does not match the hardware identification of the power module.

Recommended actions:

- Hardware fault – Contact the supplier of the drive

PAd	**Keypad has been removed when the drive is receiving the reference from the keypad**
34	The *PAd* trip indicates that the drive is in keypad mode [*Reference Selector* (01.014) = 4 or 6] and the keypad has been removed or disconnected from the drive. **Recommended actions:** • Re-install keypad and reset • Change *Reference Selector* (01.014) to select the reference from another source
Pb.bt	**Power board is in bootloader mode**
245	Power board is in bootloader mode **Recommended actions:** • Send power board firmware file to reprogram the power board using Connect and power cycle drive.
Pb.Er	**Communication has been lost / errors detected between control and power processor**
93	The *Pb.Er* trip is initiated if there is no communications between the control board processor and the power board processor. The reason for the trip can be identified by the sub-trip number.

Sub-trip	Reason
1	PLL operating region out of lock
2	Power board lost communication with user board
3	User board lost communication with power board
4	Communication CRC error

Recommended actions:

- Hardware fault – Contact the supplier of the drive

Pb.HF	**Power board HF**
235	Power processor hardware fault. The sub-trip number is the HF code. **Recommended actions:** • Hardware fault - Contact the supplier of the drive
Pd.S	**Power down save error**
37	The *Pd.S* trip indicates that an error has been detected in the power down save parameters saved in non-volatile memory. **Recommended actions:** • Perform a 1001 save in Pr **00** to ensure that the trip doesn't occur the next time the drive is powered up.

Trip	Diagnosis
PH.Lo	**Supply phase loss**
32	The *PH.Lo* trip indicates that the drive has detected an input phase loss or large supply imbalance. The drive will attempt to stop the motor before this trip is initiated. If the motor cannot be stopped in 10 seconds the trip occurs immediately. The *PH.Lo* trip works by monitoring the ripple voltage on the DC bus of the drive, if the DC bus ripple exceeds the threshold, the drive will trip on PH.Lo. Potential causes of the DC bus ripple are input phase loss, Large supply impedance and severe output current instability.

Source	xx	y	zz
Control system	00	0	00: Phase loss detected based on control system feedback. The drive attempts to stop the drive before tripping unless bit 2 of *Action On Trip Detection* (10.037) is set to one.
Power system	01	0	00: Phase loss has been detected by the rectifier module.

Input phase loss detection can be disabled when the drive is required to operate from the DC supply or from a single phase supply in *Input Phase Loss Detection Mode* (06.047).

Recommended actions:

- Check the AC supply voltage balance and level at full load
- Check the DC bus ripple level with an isolated oscilloscope
- Check the output current stability
- Check for mechanical resonance with the load
- Reduce the duty cycle
- Reduce the motor load
- Disable the phase loss detection, set Pr **06.047** to 2.

PSU	**Internal power supply fault**
5	The *PSU* trip indicates that one or more internal power supply rails are outside limits or overloaded.

Source	xx	y	zz	Description
Control system	00	0	00	Internal power supply overload.
Power system	01	1		

Recommended actions:

- Remove the option module and perform a reset
- There is a hardware fault within the drive – return the drive to the supplier

r.All	**RAM allocation error**
227	The *r.All* trip indicates that an option module derivative image has requested more parameter RAM than is allowed. The RAM allocation is checked in order of resulting sub-trip numbers, and so the failure with the highest sub-trip number is given. The sub-trip is calculated as (parameter size) + (parameter type) + sub-array number.

Parameter size	Value
1 bit	1
8 bit	2
16 bit	3
32 bit	4
64 bit	5

Parameter type	Value
Volatile	0
User save	1
Power-down save	2

Derivatives can customize menus 18 and 20.

Sub-array	Menus	Value
Applications menus	18-20	1
Derivative image	29	2
Option slot 1 set-up	15	4
Option slot 1 applications	25	5

Trip	Diagnosis
r.b.ht	**Hot rectifier/brake**
250	Over-temperature detected on input rectifier or braking IGBT. **Recommended action:** • Increase ventilation by setting *Cooling Fan Control* (06.045) > 0.
Reserved	**Reserved trips**
01 **09** **12** **14 - 17** **23, 29** **38 - 39** **91, 94 - 96** **99** **101 - 109** **111** **168 - 172** **176 - 177** **190 - 198** **205 - 217** **222 - 224** **229 - 230, 233** **238 - 244** **249** **251 - 254**	These trip numbers are reserved trip numbers for future use. **Trip Number** / **Description** 01, 09, 12, 14-17, 23, 29, 38, 39 — Reserved resettable trip 91, 94 -96, 99 — Reserved resettable trip 101 - 109, 111 — Reserved resettable trip 168 - 172, 176 -177 — Reserved resettable trip 190 – 198 — Reserved resettable trip 205 - 217 — Reserved resettable trip 222 - 224 — Reserved non-resettable trip 229 - 230, 233 — Reserved non-resettable trip 238 - 244, 249 — Reserved non-resettable trip 251 - 254 — Reserved non-resettable trip
rS	**Measured resistance has exceeded the parameter range**
33	The *rS* trip indicates that the measured stator resistance of the motor during an auto-tune test has exceeded the maximum possible value of *Stator Resistance* (05.017). If the measured value or a value written to this parameter by the user exceeds ($V_{FS}/\sqrt{2}$) / *Full Scale Current Kc* (11.061), where V_{FS} is the full scale DC bus voltage then this trip is initiated. The stationary auto-tune is initiated using the auto-tune function (Pr **05.012**) or in open loop vector mode (Pr **05.014**) on the first run command after power up in mode 4 (Ur_I) or on every run command in modes 0 (Ur_S) or 3 (Ur_Auto). This trip can occur if the motor is very small in comparison to the rating of the drive. If the value is the result of a measurement made by the drive then sub-trip 0 is applied, or if it is because the parameter has been changed by the user then sub-trip 3 is applied. During the stator resistance section of auto-tuning an additional test is performed to measure the drive inverter characteristics to provide the compensation necessary for dead-times. If the inverter characteristic measurement fails then sub-trip 2 is applied. The reason for the trip can be identified by the sub-trip number. **Sub-trip** / **Reason** 0 — Stator resistance (5.017/21.012) is greater than (V_{FS} / √2) / *Full Scale Current Kc* (11.061), where V_{FS} is the full scale d.c. bus voltage; or the result is = 100 ohms. 2 — The measured Transient Inductance (5.024/21.014) is greater than 500 mH or the measured Stator Inductance (05.025/21.024) is greater than 5000 mH. 3 — A resistance value entered by the user is greater than (V_{FS} / √2) / *Full Scale Current Kc* (11.061), where V_{FS} is the full scale d.c. bus voltage. Clear this trip by setting *Stator Resistance* (05.017) to a value that is in range and resetting the drive. 4 — The measured stator resistance is not greater than the sub-trip 0 check but is outside the firmware usable range for this drive size. **Recommended actions:** • Ensure the stator resistance of the motor falls within the range of the drive model. The most likely cause of this trip is trying to measure a motor much smaller than the drive rating. Ratio's of drive size to motor size of greater than 15:1 are likely to lead to a problem. • Check that a value has not been entered in the stator resistance for the presently selected motor map that exceeds the allowed range. • Check the motor cable / connections • Check the integrity of the motor stator winding using an insulation tester • Check the motor phase to phase resistance at the drive terminals • Check the motor phase to phase resistance at the motor terminals • Ensure the stator resistance of the motor falls within the range of the drive model • Select fixed boost mode (Pr **05.014** = Fd) and verify the output current waveforms with an oscilloscope • Replace the motor

Trip	Diagnosis
SCL	**Control word watchdog has timed out**
30	The *SCL* trip indicates that the control word has been enabled and has timed out. **Recommended actions:** • Once Pr **06.042** bit 14 has been changed from 0 to 1 to enable the watchdog, this must be repeated every 1s or a *SCL* trip will be initiated. The watchdog is disabled when the trip occurs and must be re-enabled if required when the trip is reset.
SL.dF	**Option module in option slot 1 has changed**
204	The *SL.dF* trip indicates that the option module in option slot 1 on the drive is a different type to that installed when parameters were last saved on the drive. The reason for the trip can be identified by the sub-trip number.

Sub-trip	Reason
1	No module was installed previously
2	A module with the same identifier is installed, but the set-up menu for this option slot has been changed, and so default parameters have been loaded for this menu.
3	A module with the same identifier is installed, but the applications menu for this option slot has been changed, and so default parameters have been loaded for this menu.
4	A module with the same identifier is installed, but the set-up and applications menu for this option slot have been changed, and so default parameters have been loaded for these menus.
>99	Shows the identifier of the module previously installed.

Recommended actions:

- Turn off the power, ensure the correct option module is installed in the option slot and re-apply the power.
- Confirm that the currently installed option module is correct, ensure option module parameters are set correctly and perform a user save in Pr **mm.000.**

SL.Er	**Option module in option slot 1 has detected a fault**
202	The *SL.Er* trip indicates that the option module in option slot 1 on the drive has detected an error. The reason for the error can be identified by the sub-trip number. As default, the sub-trip number is shown as a number on the display. However, it is possible for the option module to supply sub-trip number strings which will be displayed instead of the number if available. **Recommended actions:** • See relevant *option module User Guide* for details of the trip
SL.HF	**Option module 1 hardware fault**
200	The *SL.HF* trip is generated by the drive. The possible causes of the trip can be identified by the sub-trip number.

Sub-trip	Reason
1	The module category cannot be identified
2	All the required customized menu table information has not been supplied or the tables supplied are corrupt
3	There is insufficient memory available to allocate the comms buffers for this module
4	The module has not indicated that it is running correctly during drive power-up
5	Module has been removed after power-up or it has stopped working
6	The module has not indicated that it has stopped accessing drive parameters during a drive mode change
7	The module has failed to acknowledge that a request has been made to reset the drive processor
8	The drive failed to read correctly the menu table from the module during drive power-up.
9	The drive failed to upload menu tables from the module and timed-out (5s).
10	Menu table CRC invalid.

Recommended actions:

- Ensure the option module is installed correctly
- Replace the option module
- Replace the drive

SL.nF	**Option module in option slot 1 has been removed**
203	The *SL.nF* trip indicates that the option module in option slot 1 on the drive has been removed since the last power up. The sub-trip number gives the ID code of the option module that has been removed. **Recommended actions:** • Ensure the option module is installed correctly. • Re-install the option module. • To confirm that the removed option module is no longer required perform a save function in Pr **00**.

<table>
<tr><th>Trip</th><th>Diagnosis</th></tr>
<tr><td>SL.tO</td><td>Option module watchdog function service error</td></tr>
<tr><td>201</td><td>The SL.tO trip indicates that the option module installed in Slot 1 has started the option watchdog function and then failed to service the watchdog correctly.
Recommended actions:
• Replace the option module</td></tr>
<tr><td>So.St</td><td>Soft start relay failed to close, soft start monitor failed</td></tr>
<tr><td>226</td><td>The So.St trip indicates that the soft start relay in the drive failed to close or the soft start monitoring circuit has failed. The cause of the trip can be identified by the sub-trip number.
<table>
<tr><th>Sub-trip</th><th>Reason</th></tr>
<tr><td>1</td><td>Soft-start failure</td></tr>
<tr><td>2</td><td>DC bus capacitor failure on 110 V drive (size 2 only)</td></tr>
</table>
Recommended actions:
• Hardware fault – Contact the supplier of the drive</td></tr>
<tr><td>St.HF</td><td>Hardware trip has occurred during last power down</td></tr>
<tr><td>221</td><td>The St.HF trip indicates that a hardware trip (HF01 –HF18) has occurred and the drive has been power cycled. The sub-trip number identifies the HF trip.
Recommended actions:
• Enter 1299 in Pr 00 and press reset to clear the trip</td></tr>
<tr><td>Sto</td><td>No Safe Torque Off board fitted</td></tr>
<tr><td>234</td><td>STO board not fitted correctly.
Recommended actions:
Hardware fault – Contact the supplier of the drive</td></tr>
<tr><td>th</td><td>Motor thermistor over-temperature</td></tr>
<tr><td>24</td><td>The th trip indicates that the motor thermistor connected to terminal 14 (digital input 5) on the control connections has indicated a motor over temperature. If digital input 5 mode (08.035) is 2 then a th trip is initiated if the feedback value is higher than Thermistor Trip Threshold (07.048).
Recommended actions:
• Check motor temperature
• Check threshold level (Pr 07.048).
• Check thermistor continuity</td></tr>
<tr><td>th.br</td><td>Brake resistor over temperature</td></tr>
<tr><td>10</td><td>The th.br trip is initiated if the hardware based braking resistor thermal monitoring is connected and the resistor overheats. If the braking resistor is not used, then this trip must be disabled with bit 3 of Action On Trip Detection (10.037) to prevent this trip.
Recommended actions:
• Check brake resistor wiring
• Check braking resistor value is greater than or equal to the minimum resistance value
• Check braking resistor insulation</td></tr>
<tr><td>tH.Fb</td><td>Internal thermistor has failed</td></tr>
<tr><td>218</td><td>The tH.Fb trip indicates that an internal thermistor has failed in the drive (i.e. open circuit or short circuit). The thermistor location can be identified by the sub-trip number.
<table>
<tr><th>Source</th><th>xx</th><th>y</th><th>zz</th></tr>
<tr><td>Power system</td><td>01</td><td>0</td><td>Thermistor location defined by zz</td></tr>
<tr><td>Power system</td><td>01</td><td>1</td><td>Thermistor location defined by zz in the rectifier.</td></tr>
</table>
Recommended actions:
• Hardware fault – Contact the supplier of the drive</td></tr>
<tr><td>thS</td><td>Motor thermistor short circuit</td></tr>
<tr><td>25</td><td>The thS trip indicates that the motor thermistor connected to terminal 14 (digital input 5) on the control connections, is short circuit or low impedance (<50 Ω).
Recommended actions:
• Check thermistor continuity
• Replace motor / motor thermistor</td></tr>
</table>

<table>
<tr><th>Trip</th><th>Diagnosis</th></tr>
<tr><td>tun.S</td><td>Autotune test stopped before completion</td></tr>
<tr><td>18</td><td>The drive was prevented from completing an autotune test, because either the drive enable or the drive run were removed.
Recommended actions:
• Check the drive enable signal (Terminal 31 & 34 on size 1 to 4 or terminals 31 & 35 on size 5 to 9) were active during the autotune.
• Check the run command was active in digital input 3 or 4 state (Pr 08.003 or Pr 08.004) during the autotune.</td></tr>
<tr><td>tun.1</td><td>Required speed could not be reached</td></tr>
<tr><td>11</td><td>The drive has tripped during an autotune. The cause of the trip can be identified from the sub-trip number.
<table>
<tr><th>Sub-trip</th><th>Reason</th></tr>
<tr><td>2</td><td>The motor did not reach the required speed during rotating autotune or mechanical load measurement</td></tr>
</table>
Recommended actions:
• Ensure the motor is free to turn i.e. mechanical brake is released
• Ensure Mechanical Load Test Level (05.021) is set correctly</td></tr>
<tr><td>tun.3</td><td>Measured inertia has exceeded the parameter range (RFC-A mode only)</td></tr>
<tr><td>13</td><td>The drive has tripped during a rotating autotune or mechanical load measurement test. The cause of the trip can be identified from the associated sub-trip number.
<table>
<tr><th>Sub-trip</th><th>Reason</th></tr>
<tr><td>1</td><td>Measured inertia has exceeded the parameter range during a mechanical load measurement</td></tr>
<tr><td>3</td><td>The mechanical load test has been unable to identify the motor inertia</td></tr>
</table>
Recommended actions:
• Check motor cable wiring is correct</td></tr>
<tr><td>U.OI</td><td>User OI ac</td></tr>
<tr><td>8</td><td>A U.OI trip is initiated if the output current of the drive exceeds the trip level set by User Over Current Trip Level (04.041).</td></tr>
<tr><td>U.S</td><td>User Save error / not completed</td></tr>
<tr><td>36</td><td>The U.S trip indicates that an error has been detected in the user save parameters saved in non-volatile memory.
For example, following a user save command, If the power to the drive was removed when the user parameters were being saved.
Recommended actions:
• Perform a user save in Pr 00 to ensure that the trip doesn’t occur the next time the drive is powered up.
• Ensure that the drive has enough time to complete the save before removing the power to the drive.</td></tr>
<tr><td>UP.uS</td><td>Trip generated by an onboard user program</td></tr>
<tr><td>96</td><td>This trip can be initiated from within an onboard user program using a function call which defines the sub-trip number.
Recommended actions:
• Check the user program</td></tr>
</table>

Trip	Diagnosis
UPrG	**Onboard user program error**
249	An error has been detected in the onboard user program image. The sub-trip indicated the reason for the trip.

Sub-trip	Reason	Comments
1	Divide by zero.	
2	Undefined trip.	
3	Attempted fast parameter access set-up with non-existent parameter.	
4	Attempted access to non-existent parameter.	
5	Attempted write to read-only parameter.	
6	Attempted an over-range write.	
7	Attempted read from write-only parameter.	
30	The image has failed because either its CRC is incorrect, or there are less than 6 bytes in the image or the image header version is less than 5.	Occurs when the drive powers-up or the image is programmed. The image tasks will not run.
31	The image requires more RAM for heap and stack than can be provided by the drive.	As 30.
32	The image requires an OS function call that is higher than the maximum allowed.	As 30.
33	The ID code within the image is not valid.	As 30.
34	The user program image has been changed for an image with a different user program number.	As 30.
40	The timed task has not completed in time and has been suspended.	*Onboard User Program: Enable* (11.047) is reset to zero when the trip is initiated.
41	Undefined function called, i.e. a function in the host system vector table that has not been assigned.	As 40.
52	Customizable menu table CRC check failed.	As 30.
53	Customizable menu table changed.	Occurs when the drive powers-up or the image is programmed and the table has changed. Defaults are loaded for the user program menu and the trip will keep occurring until drive parameters are saved.
80	*Image is not compatible with the control board	Initiated from within the image code.
81	*Image is not compatible with the control board serial number	
100	Image has detected and prevented attempted pointer access outside of the IEC task's heap area.	
101	Image has detected and prevented misaligned pointer usage.	
102	Image has detected an array bounds violation and prevented its access.	
103	Image has attempted to convert a data type to or from an unknown data type, has failed and has shut itself down.	
104	Image has attempted to use an unknown user service function.	
200	User program has invoked a "divide" service with a denominator of zero. (Note that this is raised by the downloaded image and has therefore been given a distinct error code despite being the same fundamental problem as sub-trip 1.)	
201	Parameter access is not supported. An attempt to read database other than the host drive.	
202	Parameter does not exist. Database was host drive but the specified parameter does not exist.	
203	Parameter is read-only.	
204	Parameter is write-only.	
205	Unknown parameter error.	
206	Invalid bit present in parameter. The parameter does not contain the specified bit.	
207	Parameter format lookup failed. Failed to get parameter information data.	
208	An over-range write has been attempted.	

The following table shows the differences when compared to the derivative product image.

Sub-trip	Difference
40,41	Onboard User Program: Enable (11.047) is reset to zero when the trip is initiated.
51	Not applicable as core menu Customization not allowed.
6x	Not applicable as option module restrictions not allowed.
7x	Not applicable as option module restrictions not allowed.
100	Image has detected and prevented attempted pointer access outside of the IEC task's heap area.
101	Image has detected and prevented misaligned pointer usage.
102	Image has detected an array bounds violation and prevented its access.
103	Image has attempted to convert a data type to or from an unknown data type, has failed and has shut itself down.
104	Image has attempted to use an unknown user service function.
200	User program has invoked a "divide" service with a denominator of zero. (Note that this is raised by the downloaded image and has therefore been given a distinct error code despite being the same fundamental problem as sub-trip 1)

Table 12-3 Serial communications look up table

No	Trip	No	Trip	No	Trip
1	rES	90	LF.Er	199	dESt
2	OV	91	rES	200	SL.HF
3	OI.AC	92	OI.Sn	201	SL.tO
4	OI.br	93	Pb.Er	202	SL.Er
5	PSU	94 - 95	rES	203	SL.nF
6	Et	96	UP.uS	204	SL.dF
7	O.SPd	97	d.Ch	205 - 214	rES
8	U.OI	98	Out.P	215	rES
9	rES	99	rES	216 - 217	rES
10	th.br	100	rESEt	218	tH.Fb
11	tun.1	101	rES	219	Oht.C
12	rES	102	rES	220	P.dAt
13	tun.3	103 - 108	rES	221	St.HF
14 - 17	rES	109	rES	222	rES
18	tun.S	110	dcct	223 - 224	rES
19	It.br	111	rES	225	Cur.O
20	It.Ac	112 - 167	t112 - t167	226	So.St
21	Oht.I	168 - 172	rES	227	r.All
22	Oht.P	173	FAn.F	228	OI.SC
23	rES	174	C.SL	229	rES
24	th	175	C.Pr	230	rES
25	thS	176	rES	231	Cur.c
26	O.Ld1	177	rES	232	dr.CF
27	Oh.dc	178	C.by	233	rES
28	cL.A1	179	C.d.E	234	Sto
29	rES	180	C.OPt	235	Pb.HF
30	SCL	181	C.rdo	236	no.PS
31	EEF	182	C.Err	237	FI.In
32	PH.Lo	183	C.dAt	238 - 244	rES
33	rS	184	C.Ful	245	Pb.bt
34	PAd	185	C.Acc	246	dEr.E
35	CL.bt	186	C.rtg	247	Fi.Ch
36	U.S	187	C.tyP	248	dEr.I
37	Pd.S	188	C.cPr	249	UPrG
38	rES	189	OI.A1	250	r.b.ht
39	rES	190	rES	251 - 254	rES
40 - 89	t040 - t089	191 - 198	rES	255	rSt.L

The trips can be grouped into the following categories. It should be noted that a trip can only occur when the drive is not tripped or is already tripped but with a trip with a lower priority number.

Table 12-4 Trip categories

Priority	Category	Trips	Comments
1	Internal faults	HFxx	These indicate internal problems and cannot be reset. All drive features are inactive after any of these trips occur.
1	Stored HF trip	{St.HF}	This trip cannot be cleared unless 1299 is entered into *Parameter* **00** and a reset is initiated.
2	Non-resettable trips	Trip numbers 218 to 247, {SL.HF}	These trips cannot be reset.
3	Volatile memory failure	{EEF}	This can only be reset if Parameter **00** is set to 1233 or 1244, or if *Load Defaults* (11.043) is set to a non-zero value.
4	NV Media Card trips	Trip numbers 174, 175 and 177 to 188	These trips are priority 5 during power-up.
4	Internal 24V	{PSU}	Rectifier 24V
5	Trips with extended reset times	{OI.AC}, {OI.br} and {FAn.F}	These trips cannot be reset until 10 s after the trip was initiated.
5	Phase loss and d.c. link power circuit protection	{PH.Lo} and {Oh.dc}	The drive will attempt to stop the motor before tripping if a {PH.Lo} trip occurs unless this feature has been disabled (see *Action On Trip Detection* (10.037). The drive will always attempt to stop the motor before tripping if an {Oh.dc} occurs.
5	Standard trips	All other trips	

12.5 Internal / Hardware trips

Trips {HF01} to {HF23} are internal faults that do not have trip numbers except HF08, HF11, HF12 & HF18. If one of these trips occurs, the main drive processor has detected an irrecoverable error. All drive functions are stopped and the trip message will be displayed on the drive keypad. If a non permanent trip occurs this may be reset by power cycling the drive. On power up after it has been power cycled the drive will trip on St.HF (the sub-trip number indicates the HF fault code). Enter 1299 in Pr **00** to clear the Stored HF trip.

12.6 Alarm indications

In any mode, an alarm is an indication given on the display by alternating the alarm string with the drive status string display. If an action is not taken to eliminate any alarm except "tuning", “LS" and “24.LoSt” the drive may eventually trip. Alarms are not displayed when a parameter is being edited.

Table 12-5 Alarm indications

Alarm string	Description
br.res	Brake resistor overload. *Braking Resistor Thermal Accumulator* (10.039) in the drive has reached 75.0 % of the value at which the drive will trip.
OV.Ld	*Motor Protection Accumulator* (04.019) in the drive has reached 75.0 % of the value at which the drive will trip and the load on the drive is >100 %.
d.OV.Ld	Drive over temperature. *Percentage Of Drive Thermal Trip Level* (07.036) in the drive is greater than 90 %.
tuning	The autotune procedure has been initialized and an autotune in progress.
LS	Limit switch active. Indicates that a limit switch is active and that is causing the motor to be stopped.
Opt.AI	Option slot alarm.
Lo.AC	Low voltage mode. See *Low AC Alarm* (10.107).
I.AC.Lt	Current limit active. See *Current Limit Active* (10.009).
24.LoSt	24V Backup not present. See *24V Alarm Loss Enable* (11.098).

12.7 Status indications

Table 12-6 Status indications

String	Description	Drive output stage
inh	The drive is inhibited and cannot be run. The Safe Torque Off signal is not applied to Safe Torque Off terminals or Pr **06.015** is set to 0.	Disabled
rdy	The drive is ready to run. The drive enable is active, but the drive inverter is not active because the final drive run is not active.	Disabled
Stop	The drive is stopped / holding zero speed.	Enabled
S.Loss	Supply loss condition has been detected.	Enabled
dc.inj	The drive is applying dc injection braking.	Enabled
Er	The drive has tripped and no longer controlling the motor. The trip code appears in the display.	Disabled
UV	The drive is in the under voltage state either in low voltage or high voltage mode.	Disabled
HEAt	The motor pre-heat function is active	Enabled

Table 12-7 Option module and other status indications at power-up

String	Status
PS.LOAD	Waiting for power stage.
The drive is waiting for the processor in the power stage to respond after power-up.	
LOAD OPtion	Waiting for an option module
The drive is waiting for the option module to respond after power-up.	
UPLOAD	Loading parameter database
At power-up it may be necessary to update the parameter database held in the drive because an Option module has changed. This may involve data transfer between the drive and option module. During this period 'UPLOAD' is displayed.	
LOAD.I	Bootloading drive firmware
The drive is waiting for the bootloader file to be transferred to the processor.	

12.8 Displaying the trip history

The drive retains a log of the last ten trips that have occurred. *Trip 0* (10.020) to *Trip 9* (10.029) store the most recent 10 trips that have occurred where *Trip 0* (10.020) is the most recent and *Trip 9* (10.029) is the oldest. When a new trip occurs it is written to *Trip 0* (10.020) and all the other trips move down the log, with oldest being lost. The date and time when each trip occurs are also stored in the date and time log, i.e. *Trip 0 Date* (10.041) to *Trip 9 Time* (10.060). The date and time are taken from *Date* (06.016) and *Time* (06.017). Some trips have sub-trip numbers which give more detail about the reason for the trip. If a trip has a sub-trip number its value is stored in the sub-trip log, i.e. *Trip 0 Sub-trip Number* (10.070) to *Trip 9 Sub-trip Number* (10.079). If the trip does not have a sub-trip number then zero is stored in the sub-trip log.

If any parameter between Pr **10.020** and Pr **10.029** inclusive is read by serial communication, then the trip number in Table 12-2 is the value transmitted.

NOTE

The trip logs can be reset by writing a value of 255 in Pr **10.038** (via serial communications only).

12.9 Behaviour of the drive when tripped

If the drive trips, the output of the drive is disabled so the load coasts to a stop. If any trip occurs, the following read only parameters are frozen until the trip is cleared. This is to help diagnose the cause of the trip.

Parameter	Description
01.001	Frequency reference
01.002	Pre-skip filter reference
01.003	Pre-ramp reference
01.069	Reference in rpm
01.070	Clamped reference
02.001	Post-ramp reference
03.001	Final demand ref
03.002	Estimated frequency
03.003	Frequency error
03.004	Frequency controller output
03.045	Frequency reference
04.001	Current magnitude
04.002	Active current
04.017	Reactive current
05.001	Output frequency
05.002	Output voltage
05.003	Power
05.005	DC bus voltage
07.001	Analog input 1
07.002	Analog input 2

If the parameters are not required to be frozen then this can be disabled by setting bit 4 of Pr **10.037**.

13 UL Listing

13.1 UL file reference

All models are UL Listed to both Canadian and US requirements. The UL file reference is: NMMS/7.E171230.

Products that incorporate the Safe Torque Off function have been investigated by UL. The UL file reference is: FSPC.E171230.

13.2 Option modules, kits and accessories

Option Modules, Control Pods, Installation Kits and other accessories for use with these drives are UL Listed.

13.3 Enclosure ratings

All models are Open Type as supplied.

The drive enclosure is not classified as a fire enclosure. A separate fire enclosure must be provided. A UL/ NEMA Type 12 enclosure is suitable.

When fitted with a conduit box the drives meet the requirements for UL Type 1. Type 1 enclosures are intended for indoor use, primarily to provide a degree of protection against limited amounts of falling dirt.

The drives meet the requirements for UL Type 12 when installed inside a Type 12 enclosure and through-hole mounted using the sealing kit and the high-IP insert (where provided).

When through-hole mounted, the drives have been evaluated as suitable for use in surrounding air temperatures up to 40 °C.

Remote Keypads are UL Type 12 when installed with the sealing washer and fixing kit provided.

When installed in a Type 1 or Type 12 enclosure, the drives may be operated in a compartment handling conditioned air.

13.4 Mounting

Drives may be surface, through-panel or tile mounted using the appropriate brackets. Drives may be mounted singly or side by side with suitable space between them (bookcase mounting).

13.5 Environment

Drives must be installed in a Pollution Degree 2 environment or better (dry, non-conductive pollution only).

The drives have been evaluated for use at ambient temperatures up to 40 °C. The drives have additionally been evaluated for 50 °C and 55 °C ambient air temperatures with a derated output.

13.6 Electrical Installation

OVERVOLTAGE CATEGORY

OVC III

SUPPLY

(Frame 1 to 4 drives)

The drives are suitable for use on a circuit capable of delivering not more than 10,000 RMS Symmetrical Amperes, at rated voltage when protected by fuses as specified in the Installation Instructions.

Some smaller drives are suitable for use on a circuit capable of delivering not more than 10,000 RMS Symmetrical Amperes, at rated voltage when protected by circuit breakers.

(Frame 5 to 9 drives)

The drives are suitable for use on a circuit capable of delivering not more than 100,000 RMS Symmetrical Amperes, at rated voltage when protected by fuses as specified in the Installation Instructions.

TERMINAL TORQUE

Terminals must be tightened to the rated torque as specified in the Installation Instructions.

WIRING TERMINALS

Drives must be installed using cables rated for 75 °C operation, copper wire only.

Where possible, UL Listed closed-loop connectors sized according to the field wiring shall be used for all field power wiring connections.

GROUND CONNECTION INSTRUCTIONS

UL Listed closed-loop connectors sized according to the field wiring shall be used for grounding connections.

BRANCH CIRCUIT PROTECTION

The fuses and circuit breakers required for branch circuit protection are specified in the Installation Instructions.

OPENING OF BRANCH CIRCUIT

Opening of the branch-circuit protective device may be an indication that a fault has been interrupted. To reduce the risk of fire or electric shock, the equipment should be examined and replaced if damaged. If burnout of the current element of an overload relay occurs, the complete overload relay must be replaced.

Integral solid state short circuit protection does not provide branch circuit protection. Branch circuit protection must be provided in accordance with the National Electrical Code (NEC), The Canadian Electrical Code, and any additional local codes.

DYNAMIC BRAKING

C200 & C300, frame sizes 1 to 4 have been evaluated for dynamic braking applications. Other drive models have not been evaluated for dynamic braking.

13.7 Motor overload protection and thermal memory retention

All drives incorporate internal overload protection for the motor load that does not require the use of an external or remote overload protection device.

The protection level is adjustable and the method of adjustment is provided in section 8.4 *Motor thermal protection* on page 70. Maximum current overload is dependent on the values entered into the current limit parameters (motoring current limit, regenerative current limit and symmetrical current limit entered as percentage) and the motor rated current parameter (entered in amperes).

The duration of the overload is dependent on motor thermal time constant. The maximum programmable time constant depends on the drive model. The method of adjustment of the overload protection is provided.

The drives are provided with user terminals that can be connected to a motor thermistor to protect the motor from high temperature, in the event of a motor cooling fan failure.

13.8 External Class 2 supply

The external power supply used to power the 24 V control circuit shall be marked: “UL Class 2”. The power supply voltage shall not exceed 24 Vdc.

13.9 Modular Drive Systems

Drives with DC+ and DC- supply connections, rated 230 V or 480 V have been investigated for use in Modular Drive Systems as inverters when supplied by the converter sections from the Commander range. In these applications the inverters are required to be additionally protected by supplemental fuses.

Alternatively, the inverters may be supplied by converter models: Mentor MP25A, 45A, 75A, 105A, 155A or 210A.

Contact the supplier of the drive for more information.

13.10 Requirement for Transient Surge Suppression

This requirement only applies to Frame Size 7 drives with rated input voltage = 575 V.

TRANSIENT SURGE SUPPRESSION SHALL BE INSTALLED ON THE LINE SIDE OF THIS EQUIPMENT AND SHALL BE RATED 575 Vac (PHASE TO GROUND), 575 Vac (PHASE TO PHASE), SUITABLE FOR OVERVOLTAGE CATEGORY III, AND SHALL PROVIDE PROTECTION FOR A RATED IMPULSE VOLTAGE TO WITHSTAND VOLTAGE PEAK OF 6 kV AND A CLAMPING VOLTAGE OF MAXIMUM 2400 V.

Index

A

Acceleration 61, 62
Advanced menus 27
Advanced parameters 83
Alarm 168
Alarm Indications 168
Autotune 64

B

Basic requirements 56

C

Cautions 8
Communications connections 19
Control connections 20
Control terminal specification 21
Current limits 70

D

Deceleration 61, 62
Defaults (restoring parameter) 28
Destination parameter 20
Diagnostics 147
Display 25
Display messages 28
Drive enable 22

F

Field weakening (constant power) operation 71
Fixed V/F mode 12

G

Getting Started 25

K

Keypad 25

M

Magnetising current 89
Mechanical Installation 15
Menu 0 27
Menu 01 - Frequency / speed reference 94
Menu 02 - Ramps 98
Menu 03 - Slave frequency, speed feedback and speed control 101
Menu 04 - Torque and current control 106
Menu 05 - Motor control 109
Menu 06 - Sequencer and clock 114
Menu 07 - Analog I/O 117
Menu 08 - Digital I/O 120
Menu 09 - Programmable logic, motorized pot and binary sum . 125
Menu 10 - Status and trips 129
Menu 11 - General drive set-up 131
Menu 12 - Threshold detectors and variable selectors 133
Menu 14 - User PID controller 138
Menu 18 - Application menu 1 142
Menu 19 - Application menu 2 143
Menu 20 - Application menu 3 143
Menu 21 - Second motor parameters 144
Menu 22 - Additional Menu 0 set-up 145
Menu structure 27
Minimum connections to get the motor running in any operating mode 57
Mode parameter 20
Motor (running the motor) 56
Motor number of poles 64
Motor rated current 63
Motor rated current (maximum) 70
Motor rated frequency 63
Motor rated power factor 64, 89
Motor rated speed 64
Motor rated voltage 63
Motor thermal protection 70

N

Notes 8

O

Onboard PLC 81
Open loop mode 12
Open loop vector mode 12
Operating mode (changing) 28, 56
Operating modes 12
Optimization 63
Options 13

P

Parameter access level 29
Parameter ranges 87
Parameter security 29
Product information 10

Q

Quick start commissioning 62
Quick start commissioning / Start-up 61
Quick start connections 56

R

Relay contacts 22
RFC-A mode 12

S

Safe Torque Off 23
Safe Torque Off/drive enable 22
Safety Information 8, 81
Saving parameters 28
Sealed enclosure - sizing 17
Serial comms lead 20
Serial communications look-up table 149
Single line descriptions 31
Solutions Module - Installing / removing 15
Status 169
Status Indications 169
Switching frequency 71

T

Trip 147
Trip History 169
Trip Indications 147

U

UL Listing Information 171
User Security 29

V

Voltage mode 65

W

Warnings 8, 82

0478-0535-02